EG4® BOSSBOX

USER MANUAL

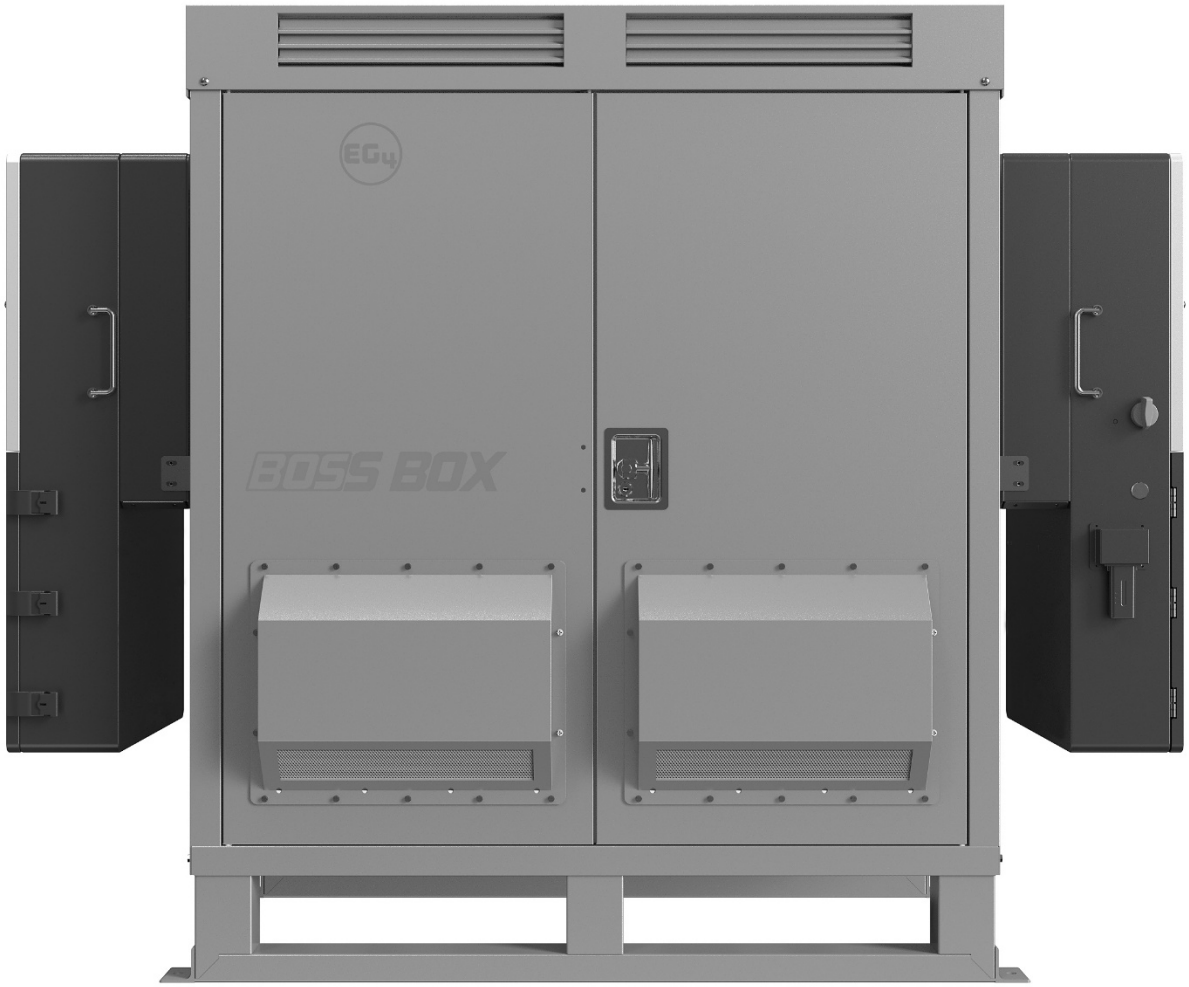

©2026 EG4® ELECTRONICS, LLC. ALL RIGHTS RESERVED.
VERSION 1.1.1 | INFORMATION SUBJECT TO CHANGE WITHOUT NOTICE.
MODEL #: BB-PP-280A-BD-AW-00

TABLE OF CONTENTS

1. TECHNICAL SPECIFICATIONS 1
2. ABBREVIATIONS 2
3. INVERTER SAFETY 3
   3.1 SAFETY INSTRUCTIONS 3
   3.2 IMPORTANT SAFETY NOTIFICATIONS 3
4. SÉCURITÉ DE L'ONDULEUR 5
   4.1 INSTRUCTIONS DE SÉCURITÉ 5
   4.2 NOTIFICATIONS DE SÉCURITÉ IMPORTANTES 5
5. BATTERY SAFETY 7
   5.1 SAFETY INSTRUCTIONS 7
   5.2 IMPORTANT SAFETY NOTIFICATIONS 7
6. SÉCURITÉ DE LA BATTERIE 9
   6.1 CONSIGNES DE SÉCURITÉ 9
   6.2 NOTIFICATIONS DE SÉCURITÉ IMPORTANTES 9
7. PRODUCT OVERVIEW 11
   7.1 PACKING LIST 13
   7.2 DIMENSIONS 16
   7.3 BATTERY PLACEMENT & CABLING 18
8. GENERAL INSTALLATION 23
   8.1 RECOMMENDED TOOLS 23
   8.1 LOCATION REQUIREMENTS 24
   8.2 CABINET, BATTERIES, & INVERTERS 26
9. MAINTENANCE 39
10. CHANGELOG 40

1. TECHNICAL SPECIFICATIONS

GENERAL DATA	
WEIGHT - EMPTY	397 lbs. (180 kg)
WEIGHT - 2 INVERTERS + 3 BATTERIES	≈1821 lbs. (826 kg)*
DIMENSIONS - WITH NO INVERTERS (HxWxD)	54.4×48×32.1 in. (1381.5×1220×815.5 mm)
DIMENSIONS - WITH 2 INVERTERS (HxWxD)	54.4×78.3×32.1 in. (1381.5×1990×815.5 mm)**
SUPPORTED INVERTERS	12kPV, 18kPV, FlexBOSS18, FlexBOSS21
SUPPORTED BATTERIES	WallMount 280Ah All Weather Battery***
WARRANTY	5 years****
SAFETY & CERTIFICATIONS	
CERTIFICATIONS	UL9540
WEATHER RATING	NEMA 3R (pending)

*Weight is approximate and could vary depending on the installed inverter model and length of cables.

**The total width is approximate and could vary depending on the installed inverter model.

***Only WallMount 280Ah All Weather batteries with adjustable feet are supported. Adjustable feet are required to support the weight of the battery to avoid damage to the battery bracket, battery, and attachment points.

****For information regarding warranty registration on EG4® Electronics products, please navigate to https://eg4electronics.com/warranty/ and select the corresponding product to begin the registration process.

2. ABBREVIATIONS

- AWG – American Wire Gauge
- A – Amps
- Ah – Amp hour(s)
- AC – Alternating Current
- AFCI – Arc-Fault Circuit Interrupter
- AHJ – Authority Having Jurisdiction
- kAIC – kilo-Amp Interrupting Capability
- ANSI – American National Standards Institute
- BAT – Battery
- BMS – Battery Management System
- COM – Communication
- CT – Current Transformer
- DC – Direct Current
- DIP – Dual In-line Package
- DOD – Depth of Discharge
- EG – Equipment Ground
- EGS – Equipment Grounding System
- EMC – Electromagnetic Compatibility
- EPS – Emergency Power System
- ESS – Energy Storage System
- E-Stop – Emergency Stop
- FCC – Federal Communication Commission
- GE – Grounding Electrode
- GEC – Grounding Electrode Conductor
- GFCI – Ground Fault Circuit Interrupter
- GFDI – Ground Fault Detector/Interrupter
- Imp – Maximum Power Point Current
- IEEE – Institute of Electrical and Electronic Engineers
- IP – Ingress Protection
- Isc – Short-Circuit Current
- In-lbs. – Inch Pounds
- kW – Kilowatt
- kWh – Kilowatt-hour
- LCD – Liquid Crystal Display
- LFP – Lithium Iron Phosphate
- L1 – Line 1
- L2 – Line 2
- mm – Millimeters
- MPPT – Maximum Power Point Tracking
- mV – Millivolt
- N – Neutral
- NEC – National Electric Code
- NEMA – National Electrical Manufacturers Association
- NFPA – National Fire Prevention Association
- Nm – Newton Meters
- NOCT – Normal Operating Cell Temperature
- PC – Personal Computer
- PCB – Printed Circuit Board
- PE – Protective Earth
- PPE – Personal Protective Equipment
- PV – Photovoltaic
- RSD – Rapid Shut Down
- SCC – Standards Council of Canada
- SOC – State of Charge
- STC – Standard Testing Conditions
- UL – Underwriters Laboratories
- UPS – Uninterrupted Power Supply
- V – Volts
- VOC – Open-Circuit Voltage
- VMP – Voltage Maximum Power

3. INVERTER SAFETY

3.1 SAFETY INSTRUCTIONS

International safety regulations have been strictly observed in the design and testing of the inverter. Before beginning any work, carefully read all safety instructions, and always observe them when working on or with the inverter. The system must be installed by qualified service personnel following the installation instructions, using appropriate practices, and in compliance with all applicable local electrical, building, fire, and utility codes or regulations. Consult with the local AHJ to obtain the proper permits and permissions before installation.

Incorrect installation may cause:

- Injury or death to the installer, operator or third party
- Damage to the inverter or other attached equipment

3.2 IMPORTANT SAFETY NOTIFICATIONS

DANGER

DANGER: ***Hazardous Voltage Circuits!***

There are various safety concerns that must be carefully observed before, during, and after the installation, as well as during future operation and maintenance. The following are important safety notifications for the installer and any end users of this product under normal operating conditions.

1. **Beware of high PV voltage.** Install an external DC disconnect switch or breaker and ensure it is in the “off” or “open” position before installing or working on the inverter. Use a voltmeter to confirm there is no DC voltage present to avoid electric shock.
2. **Beware of high grid voltage.** Ensure the AC switch and/or AC breaker are in the “off” or “open” position before installing or working on the inverter. Use a voltmeter to confirm there is no voltage present to avoid electric shock.
3. **The ESS uses DC current.** DC current can cause continuous muscle contraction in the case of electric shock and severe burns and fire if this product is mishandled.
4. **Beware of high battery current.** Ensure that the battery module breakers and/or on/off switches are in the “open” or “off” position before installing or working on the inverter. Use a voltmeter to confirm there is no DC voltage present to avoid electric shock.
5. **Do not open the inverter while it is operating to avoid electric shock and damage from live voltage and current within the system.**
6. Do not make any connections or disconnections (PV, battery, grid, communication, etc.) while the inverter is operating.
7. An installer should make sure to be well protected by reasonable and professional insulative equipment [e.g., personal protective equipment (PPE)].
8. Before installing, operating, or maintaining the system, it is important to inspect all existing wiring to ensure that it meets the appropriate specifications and conditions for use.
9. Ensure that the PV, battery, and grid connections to the inverter are secure and proper to prevent damage or injuries caused by improper installation.
10. Some components of the system can be very heavy. Be sure to utilize team-lift among other safe lifting techniques throughout the installation.
11. Rupture of the battery and shorting of battery cells can cause the release of toxic gases and harmful electrolyte solutions.

WARNING: *TO REDUCE THE RISK OF INJURY, READ ALL INSTRUCTIONS!*

All work on this product (system design, installation, operation, setting, configuration, and maintenance) must be carried out by qualified personnel. To reduce the risk of electric shock, do not perform any servicing other than those specified in the operating instructions unless qualified to do so.

1. Read all instructions before installing. For electrical work, follow all local and national wiring standards, regulations, and these installation instructions.
2. Make sure the inverter is properly grounded. All wiring should be in accordance with the National Electrical Code (NEC), ANSI/NFPA 70.
3. The inverter and system can inter-connect with the utility grid only if the utility provider permits. Consult with the local AHJ (Authority Having Jurisdiction) before installing this product for any additional regulations and requirements for the immediate area.
4. All warning labels and nameplates on the inverter should be clearly visible and must not be removed or covered.
5. The installer should consider the safety of future users when choosing the inverter's correct position and location as specified in this manual.
6. Keep children from touching or misusing the inverter and relevant systems.
7. **Beware!** The inverter and some parts of the system can be hot when in use. Do not touch the inverter's surface or most of the parts when they are operating. During operation, only the LCD and buttons should be touched.

WARNING!

Cancer and Reproductive Harm – See www.P65Warnings.ca.gov for more details.

DISCLAIMER

EG4® reserves the right to make changes to the material herein at any time without notice.
Please refer to www.eg4electronics.com for the most updated version of our manuals/spec sheets.

4. SÉCURITÉ DE L'ONDULEUR

4.1 INSTRUCTIONS DE SÉCURITÉ

Les réglementations internationales de sécurité ont été strictement observées lors de la conception et des tests de l'onduleur. Avant de commencer tout travail, lisez attentivement toutes les instructions de sécurité et respectez-les toujours lorsque vous travaillez sur ou avec l'onduleur. L'installation doit suivre toutes les normes et réglementations nationales ou locales applicables. Consultez l'autorité locale compétente et/ou le fournisseur d'électricité pour obtenir les permis et autorisations nécessaires avant l'installation.

Une installation incorrecte peut causer:

- Des blessures ou la mort de l'installateur, de l'opérateur ou d'un tiers
- Des dommages à l'onduleur ou à d'autres équipements connectés

4.2 NOTIFICATIONS DE SÉCURITÉ IMPORTANTES

DANGER

DANGER: ***Circuits à haute tension!***

Il y a divers problèmes de sécurité qui doivent être soigneusement observés avant, pendant et après l'installation, ainsi que pendant l'exploitation et la maintenance futures. Les notifications de sécurité suivantes sont importantes pour l'installateur et tout utilisateur final de ce produit dans des conditions normales de fonctionnement.

1. **Attention à la haute tension PV.** Installez un interrupteur ou disjoncteur externe de déconnexion DC et assurez-vous qu'il est en position "off" ou "ouvert" avant d'installer ou de travailler sur l'onduleur. Utilisez un voltmètre pour confirmer qu'il n'y a pas de tension DC présente afin d'éviter les chocs électriques.
2. **Attention à la haute tension du réseau.** Assurez-vous que l'interrupteur AC et/ou le disjoncteur AC sont en position "off" ou "ouvert" avant d'installer ou de travailler sur l'onduleur. Utilisez un voltmètre pour confirmer qu'il n'y a pas de tension présente afin d'éviter les chocs électriques.
3. **Attention au courant élevé de la batterie.** Assurez-vous que les disjoncteurs des modules de batterie et/ou les interrupteurs on/off sont en position "ouvert" ou "off" avant d'installer ou de travailler sur l'onduleur. Utilisez un voltmètre pour confirmer qu'il n'y a pas de tension DC présente afin d'éviter les chocs électriques.
4. **Ne pas ouvrir l'onduleur pendant qu'il fonctionne pour éviter les chocs électriques et les dommages dus à la tension et au courant en direct dans le système.**
5. Ne pas effectuer de connexions ou de déconnexions (PV, batterie, réseau, communication, etc.) pendant que l'onduleur fonctionne.
6. Un installateur doit s'assurer d'être bien protégé par un équipement isolant raisonnable et professionnel (par exemple, équipement de protection individuelle (EPI)).
7. Avant d'installer, d'exploiter ou de maintenir le système, il est important d'inspecter tous les câblages existants pour s'assurer qu'ils répondent aux spécifications et conditions appropriées pour l'utilisation.
8. Assurez-vous que les connexions PV, batterie et réseau à l'onduleur sont sécurisées et appropriées pour éviter les dommages ou les blessures causés par une installation incorrecte.
9. Certains composants du système peuvent être très lourds. Assurez-vous d'utiliser des techniques de levage en équipe parmi d'autres techniques de levage sûres tout au long de l'installation.

AVERTISSEMENT : POUR RÉDUIRE LE RISQUE DE BLESSURE, LISEZ TOUTES LES INSTRUCTIONS !

Tous les travaux sur ce produit (conception du système, installation, exploitation, réglage, configuration et maintenance) doivent être effectués par du personnel qualifié. Pour réduire le risque de choc électrique, ne réalisez aucun entretien autre que ceux spécifiés dans les instructions de fonctionnement, sauf si vous êtes qualifié pour le faire.

1. Lisez toutes les instructions avant d'installer. Pour les travaux électriques, suivez toutes les normes et réglementations locales et nationales de câblage, ainsi que ces instructions d'installation.
2. Assurez-vous que l'onduleur est correctement mis à la terre. Tous les câblages doivent être conformes au Code National de l'Électricité (NEC), ANSI/NFPA 70.
3. L'onduleur et le système peuvent se connecter au réseau électrique uniquement si le fournisseur d'électricité le permet. Consultez l'autorité locale compétente avant d'installer ce produit pour toute réglementation et exigence supplémentaire pour la zone immédiate.
4. Toutes les étiquettes d'avertissement et les plaques signalétiques sur l'onduleur doivent être clairement visibles et ne doivent pas être retirées ou couvertes.
5. L'installateur doit tenir compte de la sécurité des futurs utilisateurs lors du choix de la position et de l'emplacement corrects de l'onduleur, comme spécifié dans ce manuel.
6. Empêchez les enfants de toucher ou de mal utiliser l'onduleur et les systèmes pertinents.
7. **Attention !** L'onduleur et certaines parties du système peuvent être chauds lorsqu'ils sont utilisés. Ne touchez pas la surface de l'onduleur ou la plupart des pièces lorsqu'elles fonctionnent. Pendant le fonctionnement, seuls l'écran LCD et les boutons doivent être touchés.

AVERTISSEMENT !

Cancer et dommages reproductifs – Voir www.P65Warnings.ca.gov pour plus de détails.

DISCLAIMER

EG4® se réserve le droit de modifier le contenu de ce document à tout moment sans préavis. Veuillez consulter www.eg4electronics.com pour la version la plus récente de nos manuels/fiches techniques.

5. BATTERY SAFETY

5.1 SAFETY INSTRUCTIONS

Before any work begins, carefully read all safety instructions, and always observe them when working on or with the battery. The system must be installed by qualified service personnel following the installation instructions, using appropriate practices, and in compliance with all applicable local electrical, building, fire, and utility codes or regulations. Consult with the local AHJ and/or utility to obtain the proper permits and permissions before installation.

Incorrect installation may cause:

- *Injury or death to the installer, operator or third party*
- *Damage to the battery or other attached equipment*

5.2 IMPORTANT SAFETY NOTIFICATIONS

DANGER

DANGER! ***Hazardous Voltage Circuits!***

There are various safety concerns that must be carefully observed before, during, and after the installation, as well as during future operation and maintenance. The following are important safety notifications for the installer and any end users of this product under normal operating conditions.

1. **Do not disassemble the battery.** Contact the distributor for any issues that need repair for more information and proper handling instructions. Incorrect servicing or re-assembly may result in a risk of electric shock or fire and void the warranty.
2. **Never short-circuit DC inputs.** Short-circuiting the battery may result in a risk of electric shock or fire and can lead to severe injury or death and/or permanent damage to the unit and/or any connected equipment.
3. **Use caution when working with metal tools on or around batteries and systems. Risk** of electrical arcs and/or short circuiting of equipment can lead to severe injury or death and equipment damage.
4. **The ESS uses DC current.** DC current can cause continuous muscle contraction in the case of electric shock and severe burns if this product is mishandled.
5. **Beware of high battery current.** Ensure that the battery module breakers and/or on/off switches are in the “open” or “off” position before installing or working on the battery. Use a voltmeter to confirm there is no voltage present to avoid electric shock.
6. **Do not make any connections or disconnections to the system while the batteries are operating.** Damage to system components or risk of electrical shock may occur if working with energized batteries.
7. Make sure the battery and rack are properly grounded.
8. An installer should make sure to be well protected by reasonable and professional insulative equipment [e.g., personal protective equipment (PPE)].
9. Before installing, operating, or maintaining the system, it is important to inspect all existing wiring to ensure it meets the appropriate specifications and conditions for use.
10. Ensure that the battery and system component connections are secure and proper to prevent damage or injuries caused by improper installation.
11. Rupture of the battery and shorting of battery cells can cause the release of toxic gases and harmful electrolyte solutions.

WARNING: *TO REDUCE THE RISK OF INJURY, READ ALL INSTRUCTIONS!*

All work on this product (system design, installation, operation, setting, configuration, and maintenance) must be carried out by qualified personnel. To reduce the risk of electric shock, do not perform any servicing other than those specified in the operating instructions unless qualified to do so.

1. Read all instructions before commencing installation. For electrical work, follow all local and national wiring standards, regulations, and these installation instructions. All wiring should be in accordance with the National Electrical Code (NEC), ANSI/NFPA 70.
2. The battery and system can connect with the utility grid only if the utility provider permits. Consult with the local AHJ before installing this product for any additional regulations and requirements for the area.
3. All warning labels and nameplates on this battery should be clearly visible and must not be removed or covered.
4. The installer should consider the safety of future users when choosing the battery's correct position and location as specified in this manual.
5. Keep children away from touching or misusing the battery and relevant systems.

The battery is designed to stop charging when reaching the low threshold of 32°F. If charging current is observed when the internal battery temperature is below 32°F, disconnect battery immediately and consult distributor.

WARNING!

Cancer and Reproductive Harm – See www.P65Warnings.ca.gov for more details.

DISCLAIMER

EG4® reserves the right to make changes to the material herein at any time without notice.
Please refer to www.eg4electronics.com for the most updated version of our manuals/spec sheets.

6. SÉCURITÉ DE LA BATTERIE

6.1 CONSIGNES DE SÉCURITÉ

Avant de commencer tout travail, lisez attentivement toutes les consignes de sécurité et respectez-les toujours lorsque vous travaillez sur ou avec la batterie. L'installation doit être conforme à toutes les normes et réglementations nationales ou locales applicables. Consultez l'autorité compétente locale et/ou le service public pour obtenir les permis et les autorisations appropriés avant l'installation.

Une installation incorrecte peut entraîner les effets suivants :

- *Blessure ou décès de l'installateur, de l'exploitant ou d'un tiers*
- *Dommages à la batterie ou à tout autre équipement attaché*

6.2 NOTIFICATIONS DE SÉCURITÉ IMPORTANTES

DANGER: ***Circuits à haute tension!***

Il existe divers problèmes de sécurité qui doivent être soigneusement observés avant, pendant et après l'installation, ainsi que lors de l'utilisation et de la maintenance futures. Ce qui suit sont des notifications de sécurité importantes pour l'installateur et tout utilisateur final de ce produit dans des conditions de fonctionnement normales.

1. **Ne démontez pas la batterie.** Contactez le distributeur pour tout problème nécessitant une réparation pour plus d'informations et des instructions de manipulation appropriées. Un entretien ou un remontage incorrect peut entraîner un risque d'électrocution ou d'incendie et annuler la garantie.
2. **Ne court-circuitez jamais les entrées CC.** Un court-circuit de la batterie peut entraîner un risque d'électrocution ou d'incendie et peut entraîner des blessures graves ou la mort et/ou des dommages permanents à l'appareil et/ou à tout équipement connecté.
3. **Soyez prudent lorsque vous travaillez avec des outils métalliques sur ou à proximité des batteries et des systèmes. Le risque** d'arcs électriques et/ou de court-circuit de l'équipement peut entraîner des blessures graves ou la mort et des dommages à l'équipement.
4. **Attention au courant de batterie élevé.** Assurez-vous que les disjoncteurs du module de batterie et/ou les interrupteurs marche/arrêt sont en position « ouvert » ou « arrêt » avant d'installer ou de travailler sur la batterie. Utilisez un voltmètre pour confirmer qu'il n'y a pas de tension présente afin d'éviter les chocs électriques.
5. **N'effectuez aucune connexion ou déconnexion du système pendant que les batteries fonctionnent.** Des dommages aux composants du système ou un risque d'électrocution peuvent survenir si vous travaillez avec des batteries sous tension.
6. Assurez-vous que le banc de batteries est correctement mis à la terre.
7. Un installateur doit s'assurer d'être bien protégé par un équipement isolant raisonnable et professionnel [par exemple, un équipement de protection individuelle (EPI)].
8. Avant d'installer, d'utiliser ou d'entretenir le système, il est important d'inspecter tout le câblage existant pour s'assurer qu'il répond aux spécifications et aux conditions d'utilisation appropriées.
9. Assurez-vous que les connexions de la batterie et des composants du système sont sécurisées et appropriées pour éviter les dommages ou les blessures causés par une mauvaise installation.

AVERTISSEMENT : *Pour réduire le risque de blessure, lisez toutes les instructions !*

Tous les travaux sur ce produit (conception du système, installation, fonctionnement, réglage, configuration et maintenance) doivent être effectués par du personnel qualifié. Pour réduire le risque d'électrocution, n'effectuez aucun entretien autre que ceux spécifiés dans le mode d'emploi, à moins d'être qualifié pour le faire.

1. Lisez toutes les instructions avant de commencer l'installation. Pour les travaux électriques, suivez toutes les normes de câblage locales et nationales, les réglementations et ces instructions d'installation. Tout le câblage doit être conforme au Code national de l'électricité (NEC), ANSI/NFPA 70.
2. La batterie et le système ne peuvent se connecter au réseau public que si le fournisseur d'électricité l'autorise. Consultez l'AHJ local avant d'installer ce produit pour connaître les réglementations et exigences supplémentaires de la région.
3. Toutes les étiquettes d'avertissement et les plaques signalétiques de cette batterie doivent être clairement visibles et ne doivent pas être retirées ou couvertes.
4. L'installateur doit tenir compte de la sécurité des futurs utilisateurs lors du choix de la position et de l'emplacement corrects de la batterie, comme spécifié dans ce manuel.
5. Tenez les enfants à l'écart de la batterie et des systèmes concernés ou de les utiliser à mauvais escient.

La batterie est conçue pour arrêter de se charger lorsqu'elle atteint le seuil bas de 23 °F. Si un courant de charge est observé lorsque la température interne de la batterie est inférieure à 23 °F, débranchez immédiatement la batterie et consultez le distributeur.

Cancer et troubles de la reproduction – Voir WWW.P65WARNINGS.CA.GOV pour plus de détails.

DISCLAIMER

EG4® se réserve le droit de modifier le contenu de ce document à tout moment sans préavis. Veuillez consulter www.eg4electronics.com pour la version la plus récente de nos manuels/fiches techniques.

TAKE THESE ADDITIONAL PRECAUTIONS DURING INSTALLATION/REPLACEMENT

Ensure that all precautions listed above have been taken prior to beginning the installation and observe these additional precautions during installation. Failure to take these precautions may result in serious injury or death:

- ***Thermal Runaway:*** ***Immediately stop the installation, place battery in a safe state if possible, and move away from the battery if the battery:***
  - ***begins to swell or bulge,***
  - ***if you smell any unusual odors,***
  - ***if you hear a hissing sound, or***
  - ***if the battery begins to emit heat and/or smoke.***

  Your battery may be experiencing thermal runaway, a dangerous condition that may cause fire or explosion. Contact local fire department, Chemtrec 800-262-8200, and EG4 support.

- ***Electrical Shock: When installing/replacing the battery:***
  - ***Ensure that the battery does not get wet.***
  - ***Do not spray water or other liquids on the battery.***
  - ***Do not perform the installation in conditions where dust, moisture, or other debris could enter the battery.***
  - ***Avoid touching connections and components unless instructed to do so by this guide.***
  - ***Do not leave the battery unattended during installation without verifying it is in a safe and secure condition. Do not touch, lean on, or lay tools on the battery or connections.***

  If you are electrically shocked during installation, place battery in a safe state if possible, and seek immediate medical attention.

- ***<u>Ventilation Warning</u>: When installing/replacing the battery:***
  - ***Do not open the battery.***
  - ***Do not attempt the installation/replacement if the battery is damaged.***

Lithium batteries may emit toxic gases when ruptured. Do not attempt to repair battery in the case of rupture. Move outdoors in case of rupture and seek professional assistance.

- ***<u>Electrolyte Exposure</u>: When installing/replacing the battery:***
  - ***Ensure that the battery is not damaged.***
  - ***Do not attempt the installation/replacement if the battery is damaged.***

Lithium batteries contain a liquid electrolyte solution that is corrosive and damaging to skin and eyes. Exposure may occur in the case of damage to the battery. In the case of contact with skin or eyes, wash continuously with water for 15 minutes and seek immediate medical attention. Remove contaminated clothes immediately. In the case of ingestion, drink at least two glasses of water or milk to induce vomiting. If unconscious, seek immediate medical attention.

7. PRODUCT OVERVIEW

The BOSSBox is a specially designed metal cabinet that creates a versatile power station with EG4® hybrid inverters and WallMount 280Ah All Weather Lithium Batteries. The minimum configuration comprises one hybrid inverter and two WallMount 280Ah All Weather batteries, and the maximum configuration consists of two hybrid inverters and three WallMount 280Ah All Weather batteries.

UL 9540 LISTED INVERTER AND BATTERY COMBINATIONS	
Supported Inverters	**Supported Battery**
12kPV	EG4® WallMount 280Ah All Weather Battery*
18kPV	
FlexBOSS18	
FlexBOSS21	

*Only WallMount 280Ah All Weather batteries with adjustable feet are supported. Adjustable feet are required to support the weight of the battery to avoid damage to the battery bracket, battery, and attachment points.

7.1 PACKING LIST

The BOSSBox will ship on a pallet with the items in the packing list. The individual components are labeled in the image below, followed by the packing list on the next page. Contact the distributor if anything is missing.

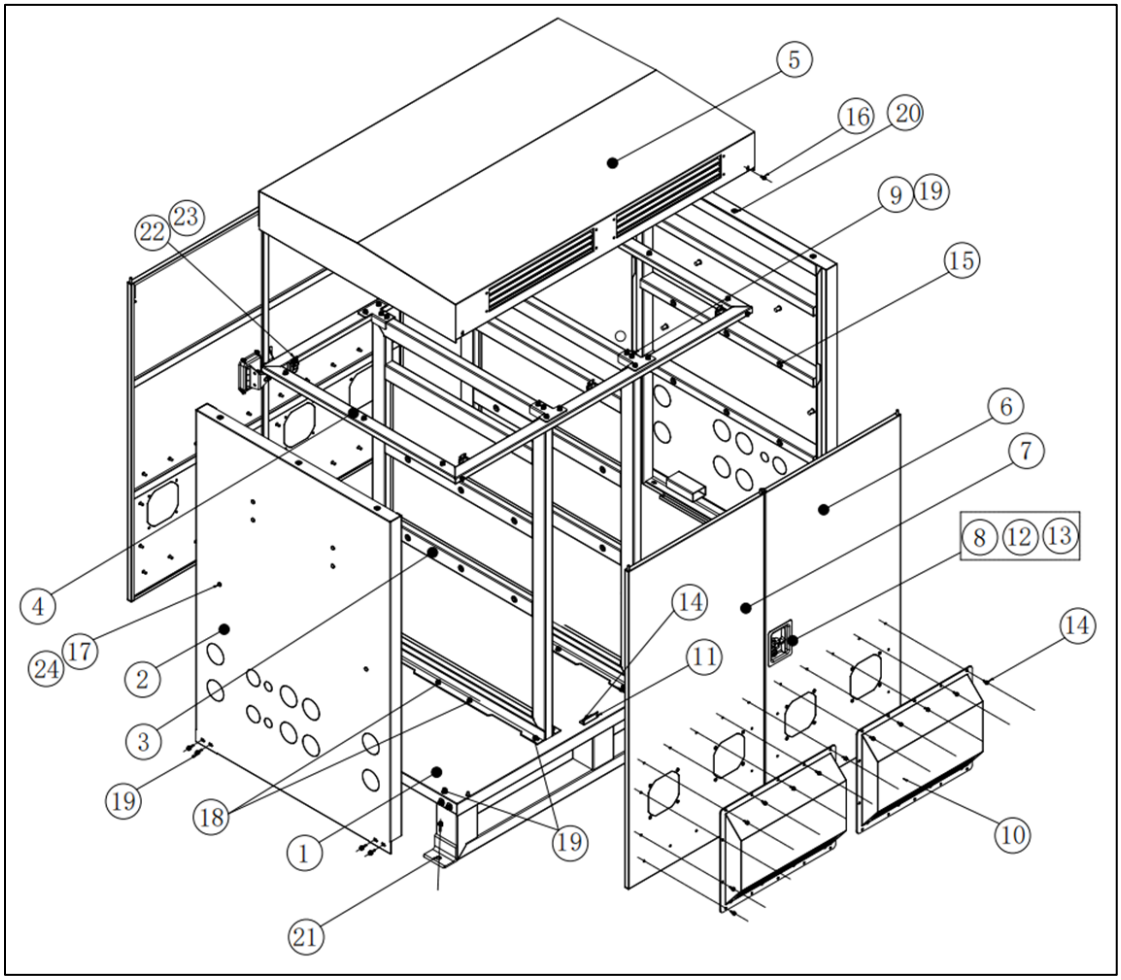

#	NAME	IMAGE	QTY	NOTE
1	Base	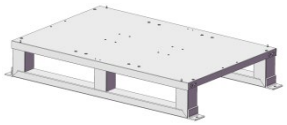	1	Cabinet base
2	Outer wall	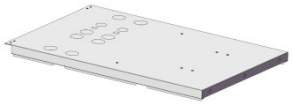	2	Cabinet outer wall
3	Inner wall	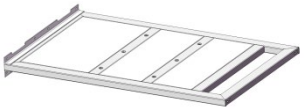	2	Cabinet inner wall
4	Top frame		1	Cabinet top frame
5	Top cover	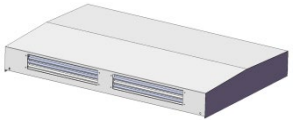	1	Cabinet top cover
6	Left door panel	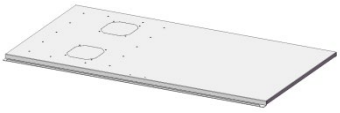	2	Cabinet left door
7	Right door panel	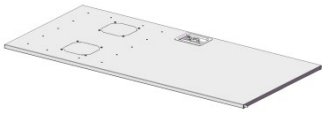	2	Cabinet right door
8	Lock catch	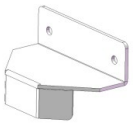	2	Installed on left doors to work with handle assembly to secure the doors in the closed position
9	Top frame bracket	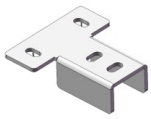	4	Top frame to center wall bracket
10	Air intake cover		2	Front door (or rear door) air intake cover
11	Doorstop		2	Provides hard stop for the doors when closed
12	Lock assembly		2	Used to open & close the right door and secure the doors from being opened
13	M4 flange nut		12	Used with lock assembly and doorstop

14	Hexagonal cross recess combination screws - M4*10		32	Used with air intake cover and doorstop
15	Hexagonal cross recess combination screws - M4*12		8	Used with the lock assembly
15	Hexagonal cross recess combination screws - M10*25		18	Used with battery wall mount brackets
16	Phillips head screws - M6*16		4	Used with top cover
17	M8*16 bolts		12	Used with inverter main bracket and lower brackets
18	Hexagonal cross recess combination screws - M6*16		12	Used with the center and outer walls to the base
19	Hexagonal cross recess combination screws - M6*20		36	Used with inner & outer walls and top frame brackets
20	Hexagonal cross recess combination screws - M6*35		6	Used with the top frame to the outer walls
21	Expansion bolt - M12*70	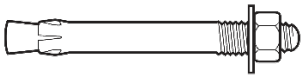	4	Used to secure the base to the floor
24	Black silicone hole plugs		12	Pre-installed in the outer walls to protect the inverter bracket mounting holes
25	84 in. (2134 mm) Degson positive battery to inverter cable		2	Used to connect the battery positive to the inverter positive
26	84 in. (2134 mm) Degson negative inverter to battery cable		2	Used to connect the battery negative to the inverter negative
27	20 ft. (6096 mm) CAT communication cable		1	Connect the master inverter to a parallel inverter

7.2 DIMENSIONS

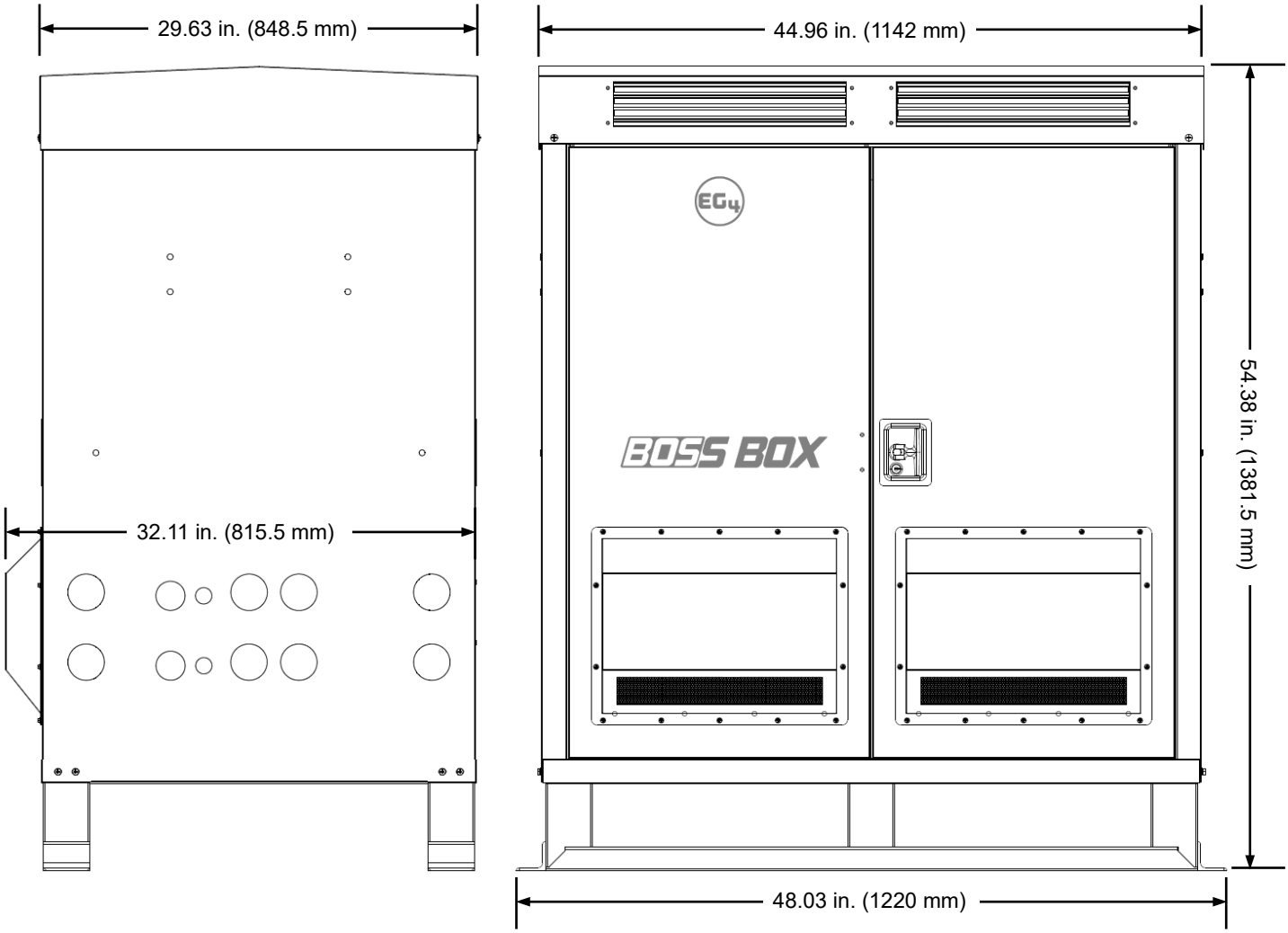

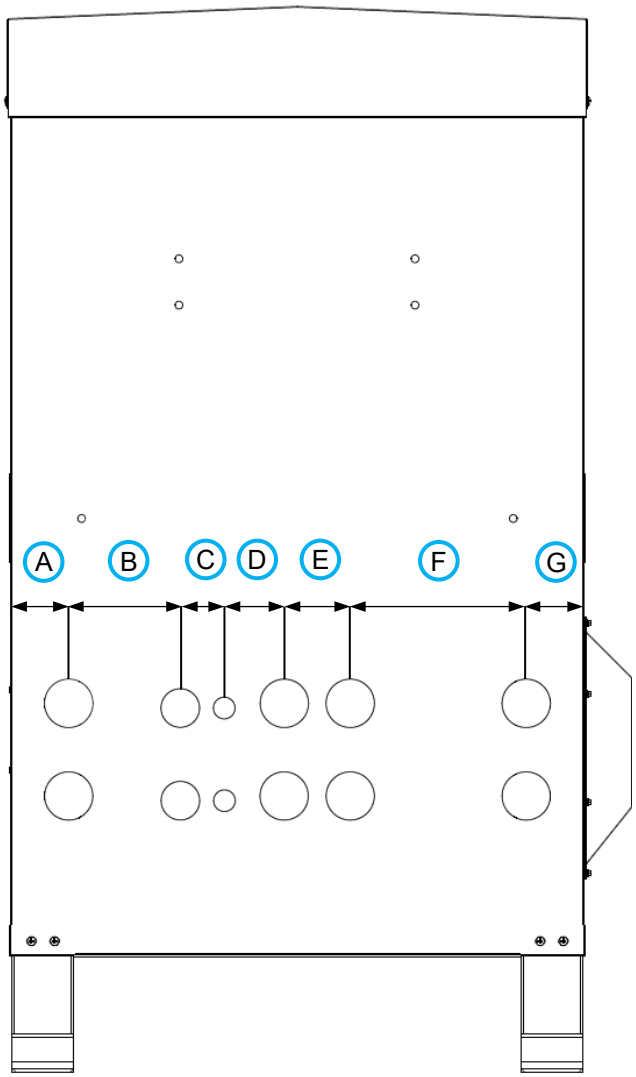

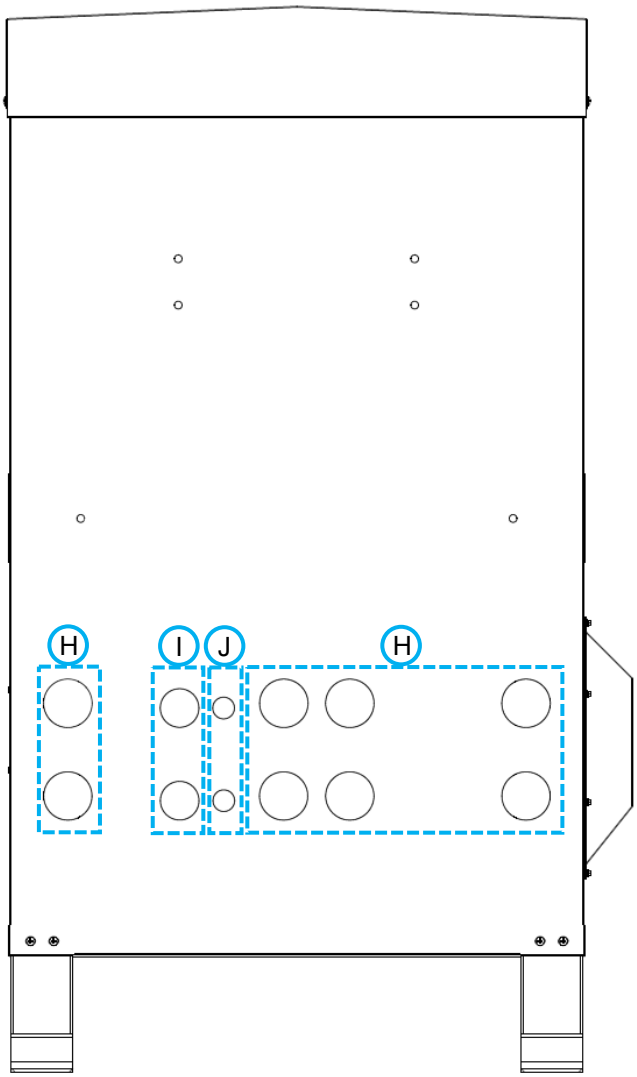

LOCATION	INCH	MM
A	2.95	75
B	5.67	144
C	2.25	57
D	3.07	78
E	3.35	85
F	8.98	228
G	2.95	75

LOCATION	U.S. NOMINAL TRADE SIZE	ACTUAL SIZE
H	2 in.	2.48 in. (63 mm)
I	1 1/2 in.	1.99 in. (50.5 mm)
J	3/4 in.	1.12 in. (28.5 mm)

7.3 BATTERY PLACEMENT & CABLING

This section describes where to place the equipment inside and outside the BOSSBox. The BOSSBox includes one BOSSBox cable kit, as shown in the table below. Additional cables must be purchased separately when adding a second inverter or more than one battery. Use this section to reference the suggested cable kits (shown below). The following pages describe cable placement, and the minimum suggested cable lengths when using custom-fabricated cables. Refer to section 8 for the general assembly steps, including cabinet assembly and the inverter and battery attachment process.

The table below lists the available kits and parts that can be purchased from an EG4 distributor:

LOCATION	MANUFACTURER SKU	QTY NEEDED	KIT INCLUDES
Inverter to Battery	EG4BBSTARTKIT* (BOSSBox Cable Kit)	1 per inverter*	• 84 in. (2134 mm) Degson positive battery to inverter cable (qty: 2) • 84 in. (2134 mm) Degson negative battery to inverter cable (qty: 2) • 20 ft. (6096 mm) CAT5 communication cable (qty: 1)
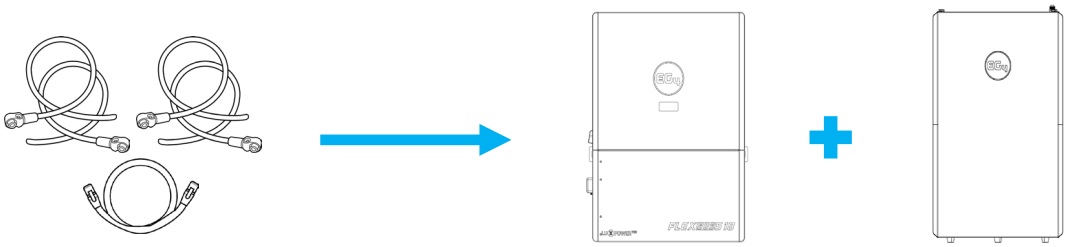			
Battery to Battery **(option 1)**	EG4SPWMBPWRCBLEKIT (EG4 WallMount AllWeather Battery Paralleling Cable Kit)	1 of each per battery to battery	• 53.1 in. (1349 mm) Red positive battery parallel cable (qty: 2) • 53.1 in. (1349 mm) Black negative battery parallel cable (qty: 2) • 59.1 in. (1501 mm) CAT5 parallel communication cable (qty: 1)
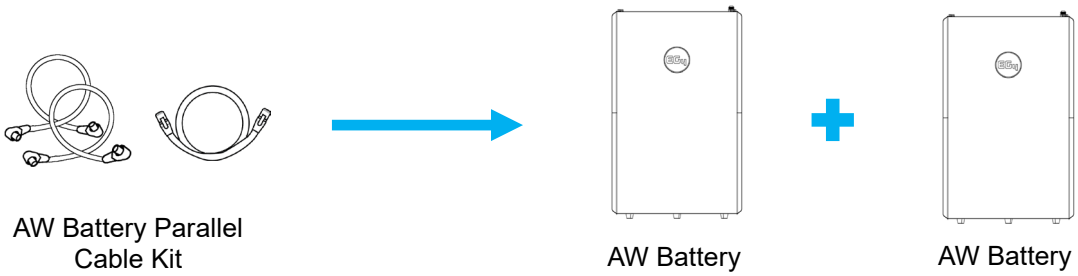			
Battery to Battery **(option 2)**	EG4SPDEGSNPLGBLK (EG4 WallMount AllWeather Battery Connectors - Black) EG4SPDEGSNPLGRED (EG4 WallMount AllWeather Battery Connectors - Red)	1 of each per battery to battery	• Degson negative battery cable connector (qty: 1) • Degson positive battery cable connector (qty: 1) *<u>Note:</u> A crimping tool is required to install the Degson connector on the non-connector end of the 39.4 in. cable included with the AW battery.*
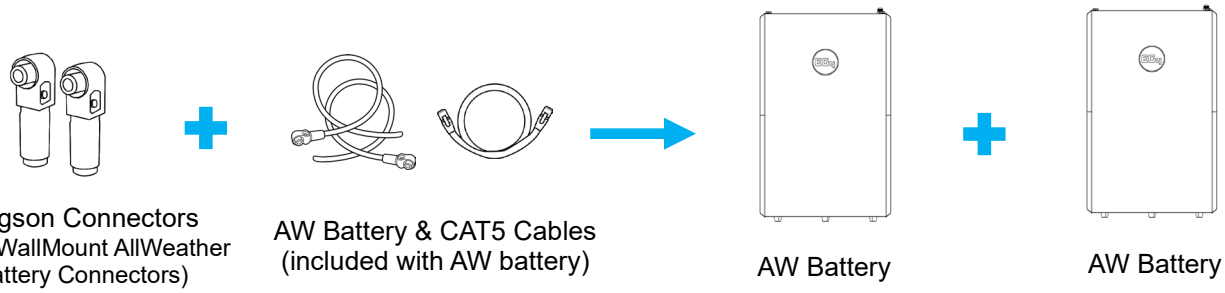			

*One BOSSBox cable kit is included with the BOSSBox

1 Inverter + 2 Batteries

Supported Inverters:

- 12kPV
- 18kPV
- FlexBOSS18
- FlexBOSS21

Required Cables:

- 72 in. (1829 mm) battery "-" to inverter "-" black cable (qty: 2)*
- 72 in. (1829 mm) battery "+" to inverter "+" red cable (qty: 2)*
- 24 in. (610 mm) battery "-" to battery "-" black cable (qty: 1)*
- 24 in. (610 mm) battery "+" to battery "+" red cable (qty: 1)*
- Inverter to battery communication cable (qty: 1)
- Battery to battery communication cable (qty: 1)

*Recommended minimum length for custom-fabricated cables

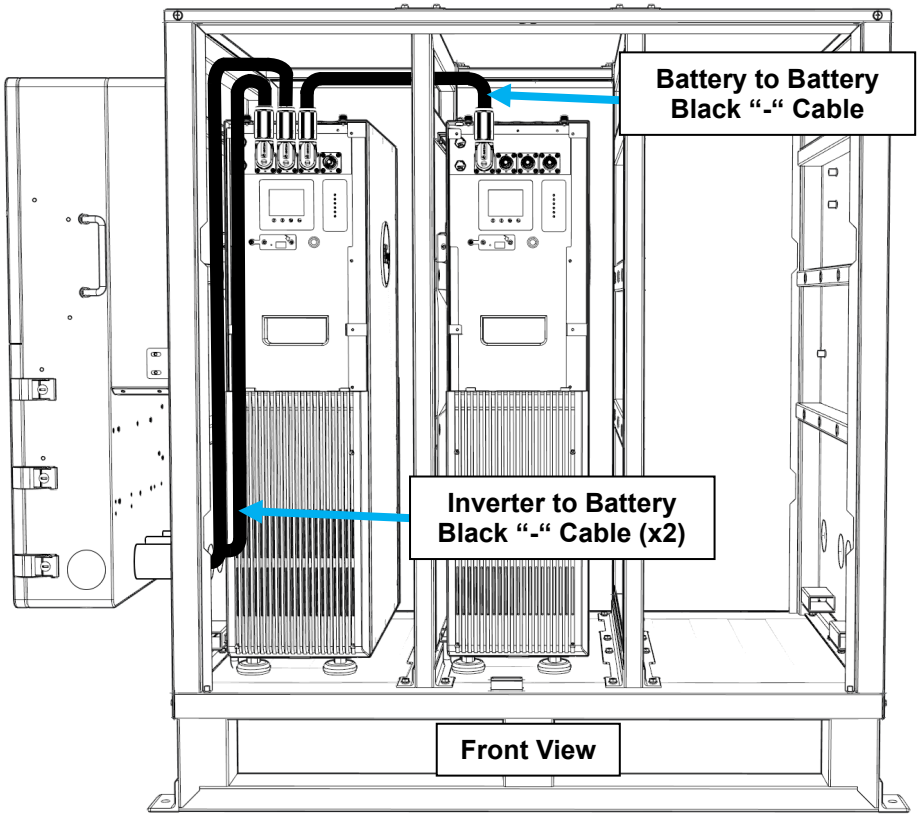

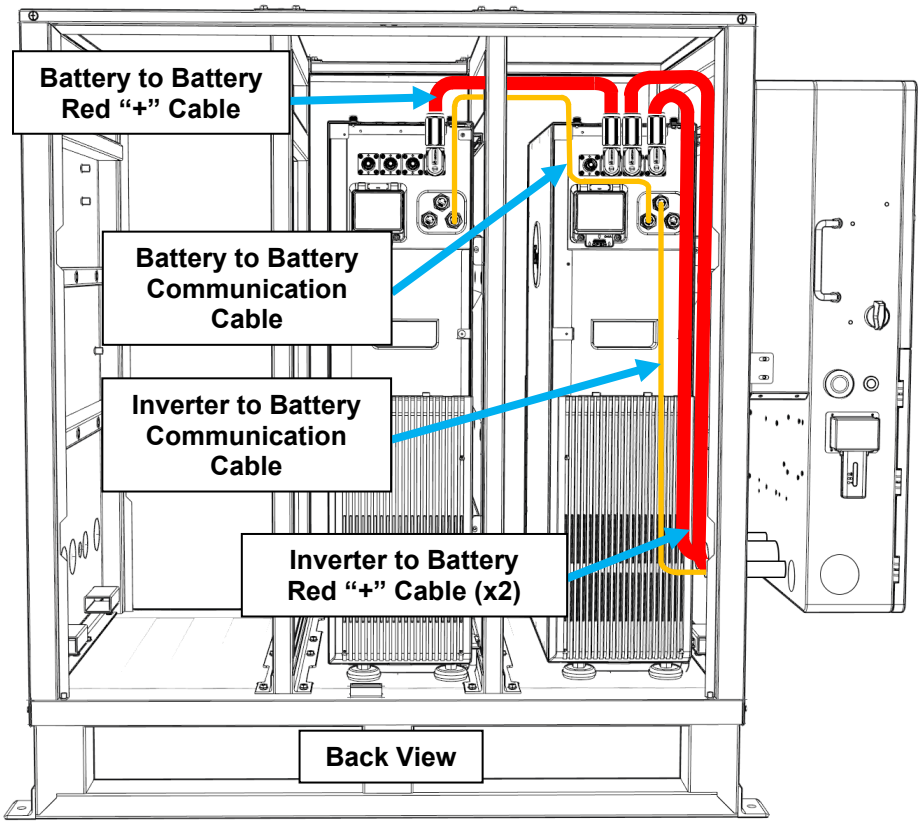

1 Inverter + 3 Batteries

Supported Inverters:

- 12kPV
- 18kPV
- FlexBOSS18
- FlexBOSS21

Required Cables:

- 72 in. (1829 mm) battery "-" to inverter "-" black cable (qty: 2)*
- 72 in. (1829 mm) battery "+" to inverter "+" red cable (qty: 2)*
- 24 in. (610 mm) battery "-" to battery "-" black cable (qty: 2)*
- 24 in. (610 mm) battery "+" to battery "+" red cable (qty: 2)*
- Inverter to battery communication cable (qty: 1)
- Battery to battery communication cable (qty: 2)

*Recommended minimum length for custom-fabricated cables

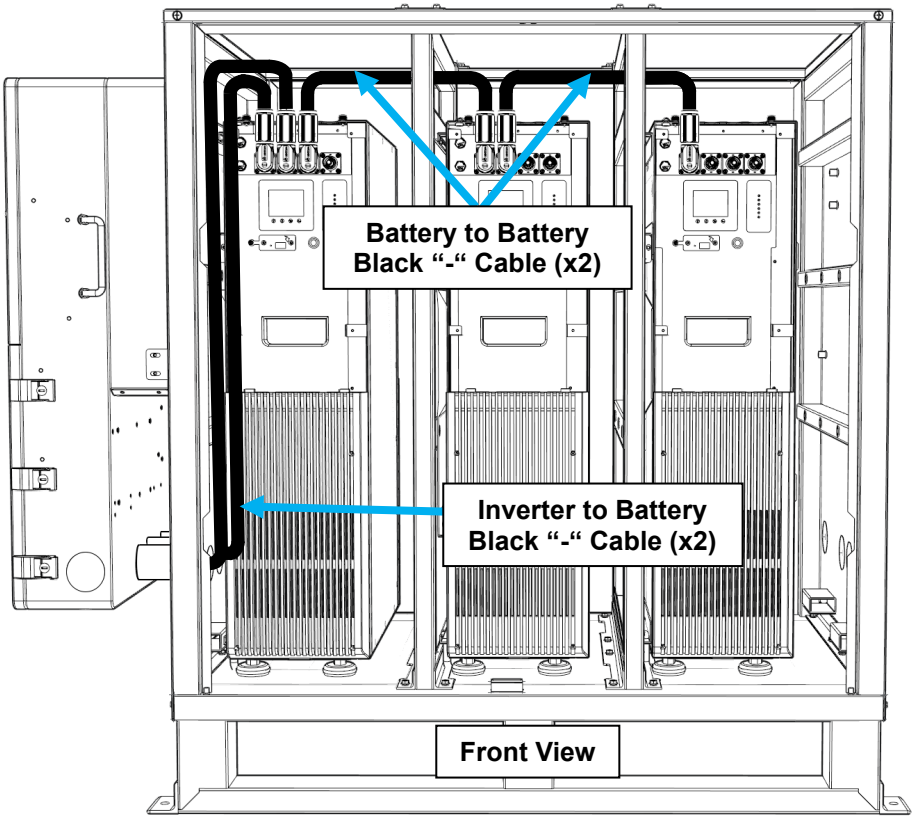

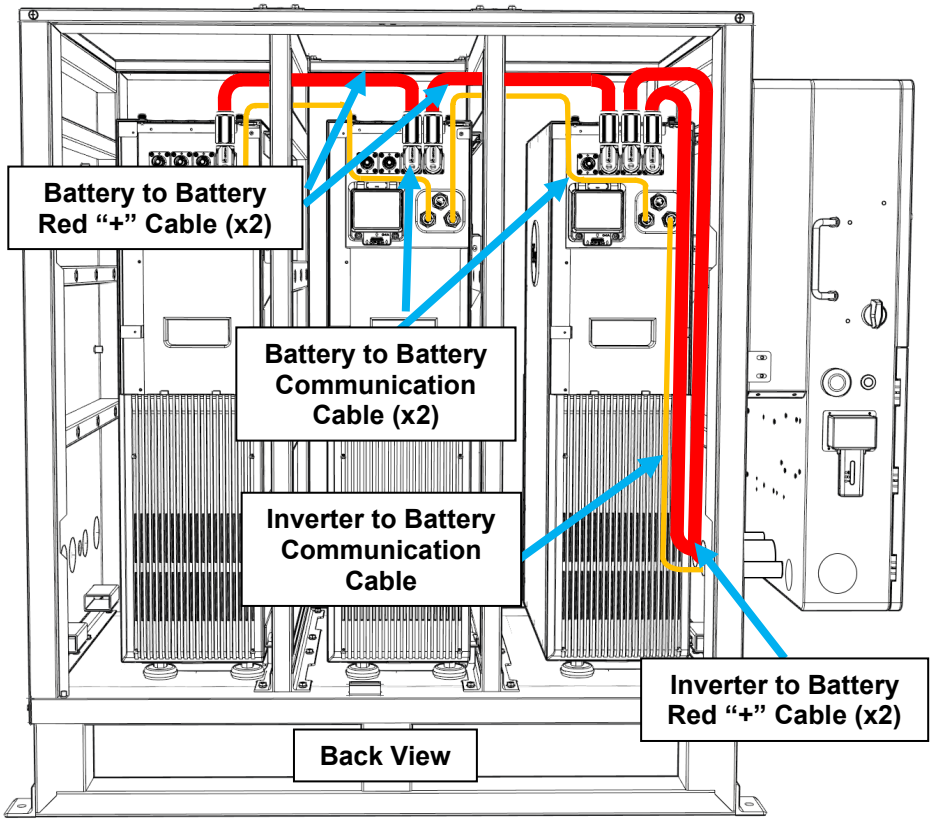

2 Inverters + 2 Batteries

Supported Inverters:

- 12kPV
- 18kPV
- FlexBOSS18
- FlexBOSS21

Required Cables:

- 72 in. (1829 mm) battery "-" to inverter "-" black cable (qty: 4)
- 72 in. (1829 mm) battery "+" to battery "+" red cable (qty: 4)
- 24 in. (610 mm) battery "-" to inverter "-" black cable (qty: 1)
- 24 in. (610 mm) battery "+" to battery "+" red cable (qty: 1)
- 20 ft. (6096 mm) inverter to inverter parallel cable (qty: 2)
- Inverter to battery communication cable (qty: 1)
- Battery to battery communication cable (qty: 1)

*Recommended minimum length for custom-fabricated cables

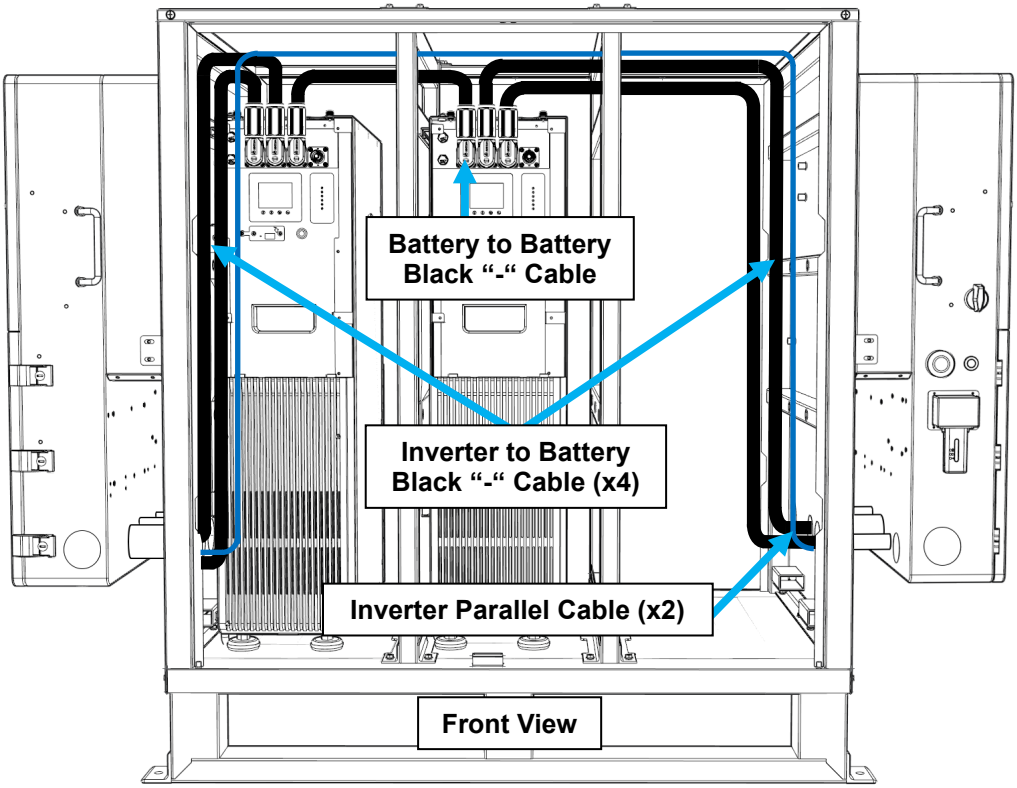

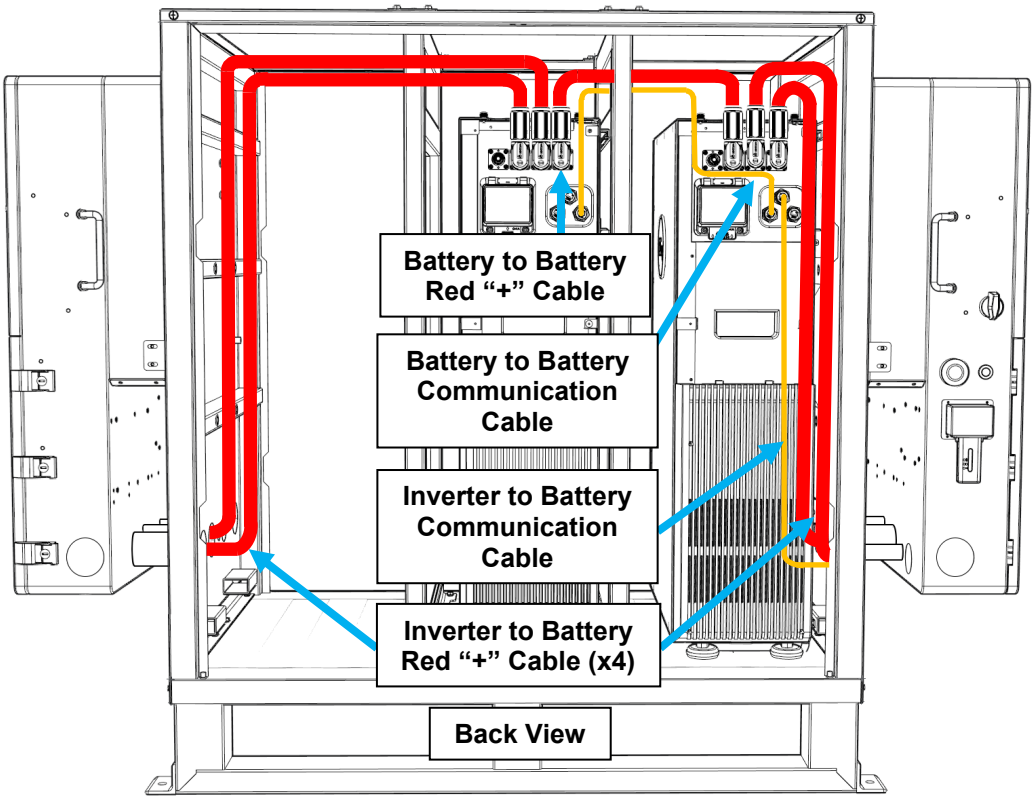

2 Inverters + 3 Batteries

Supported Inverters:

- 12kPV
- 18kPV
- FlexBOSS18
- FlexBOSS21

Required Cables:

- 72 in. (1829 mm) battery "-" to inverter "-" black cable (qty: 4)*
- 72 in. (1829 mm) battery "+" to inverter "+" red cable (qty: 4)*
- 24 in. (610 mm) battery "-" to battery "-" black cable (qty: 2)*
- 24 in. (610 mm) battery "+" to battery "+" red cable (qty: 2)*
- 20 ft. (6096 mm) Inverter to inverter parallel cable (qty: 2)
- Inverter to battery communication cable (qty: 1)
- Battery to battery communication cable (qty: 2)

*Recommended minimum length for custom-fabricated cables

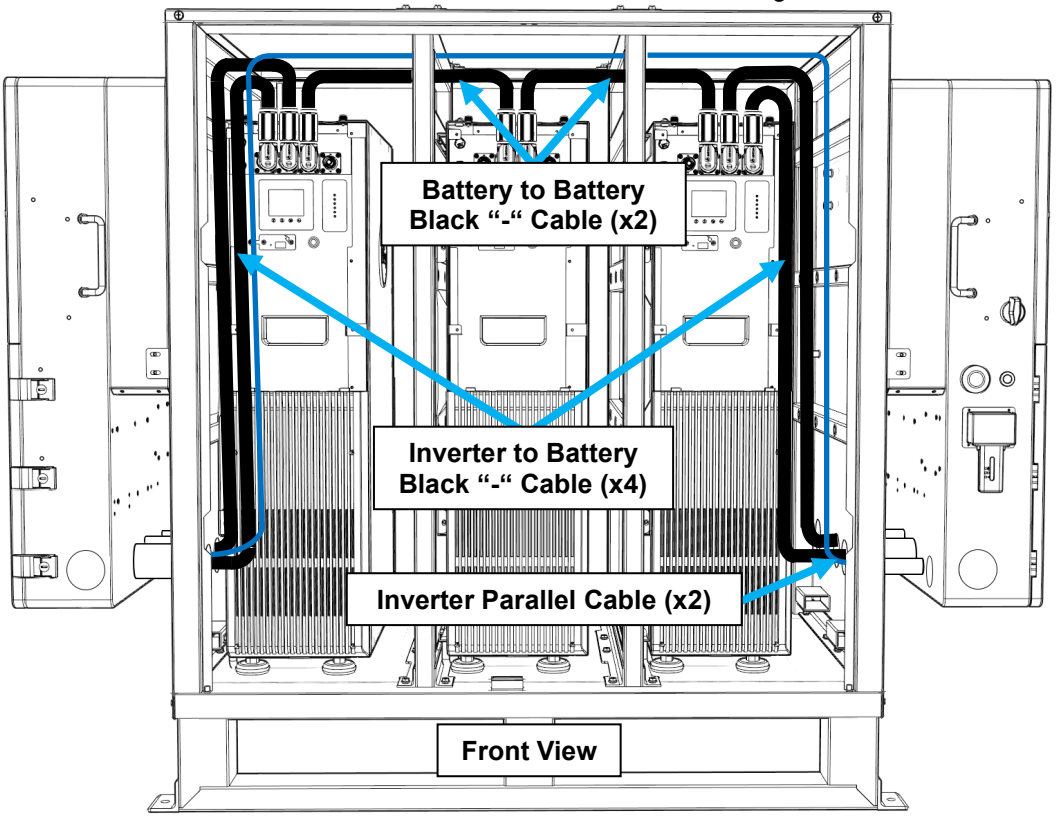

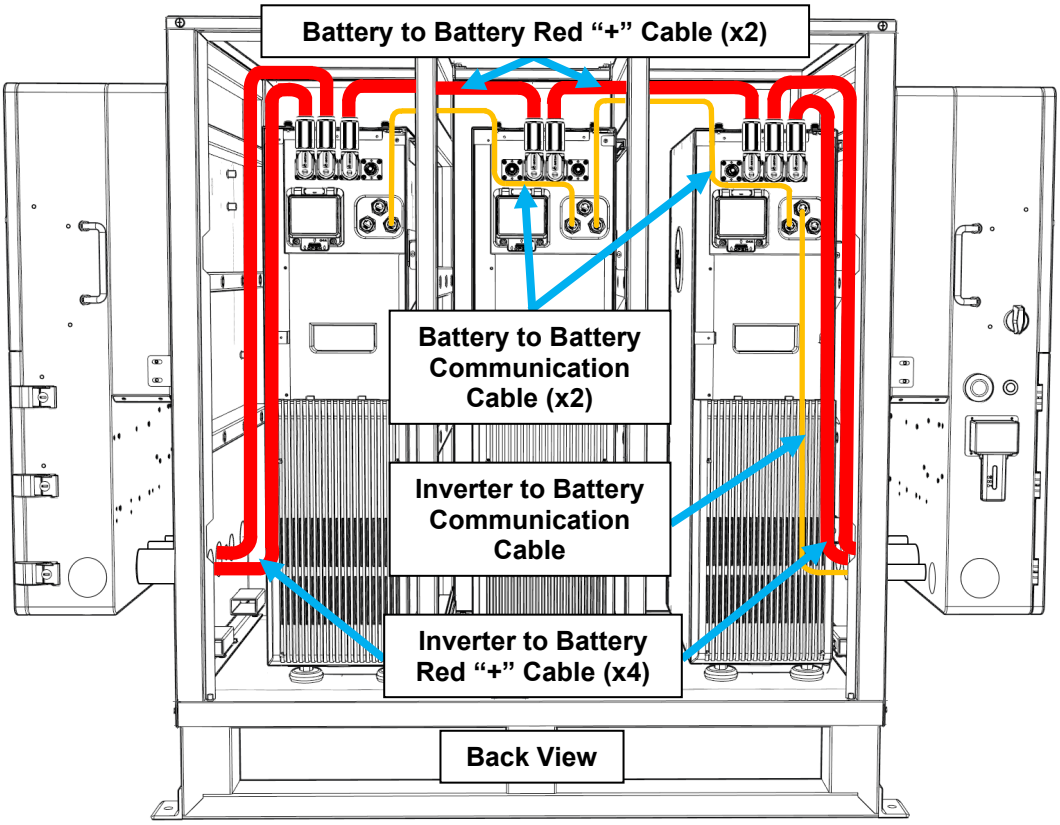

8. GENERAL INSTALLATION

This section provides detailed steps for assembling the cabinet, installing the batteries, and mounting the inverters.

WARNING:

To reduce the risk of injury, read all instructions! The assembly process requires working with heavy pieces, and the metal may contain sharp edges. It is highly recommended that at least two individuals be available to assemble the BOSSBox and install the batteries and inverters. Always wear the proper personal protective equipment (PPE) to avoid injury.

8.1 RECOMMENDED TOOLS

8.1 LOCATION REQUIREMENTS

Follow the installation requirements below to ensure all equipment is adequately supported and protected from extreme weather:

- Before installation, contact the AHJ for any clearances required by local laws and ordinances.
- EG4® recommends that the BOSSBox be placed on a level concrete pad capable of supporting at least 2,000 lbs. [With two inverters and three batteries, the weight is approximately 1,821 lbs. (826 kgs).]
- Avoid positioning the inverter attached to the BOSSBox in extended periods of direct sunlight.
- In hot climates, a shade structure is recommended if the inverter needs to be mounted in an area exposed to direct sun.
- If placed under a covered area, ensure a minimum of 15.8 in. (400 mm) above the inverter for ventilation. (see image 8.1.)
- If installed in a shed or a closed container, ensure proper ventilation is available for inverters. (Refer to the inverter user manual for more information.)
- Do not install in marine environments.
- If BOSSBox is installed in a floodplain, ensure that the installation location is elevated above the expected flood level to ensure it remains dry during flooding. Always consult flood zone maps and local building codes to determine the appropriate elevation installation.
- Maintain the minimum clearances to ensure all component wiring and controls are easily accessible to support routine operations and maintenance. (see image 8.2 on page 23.)

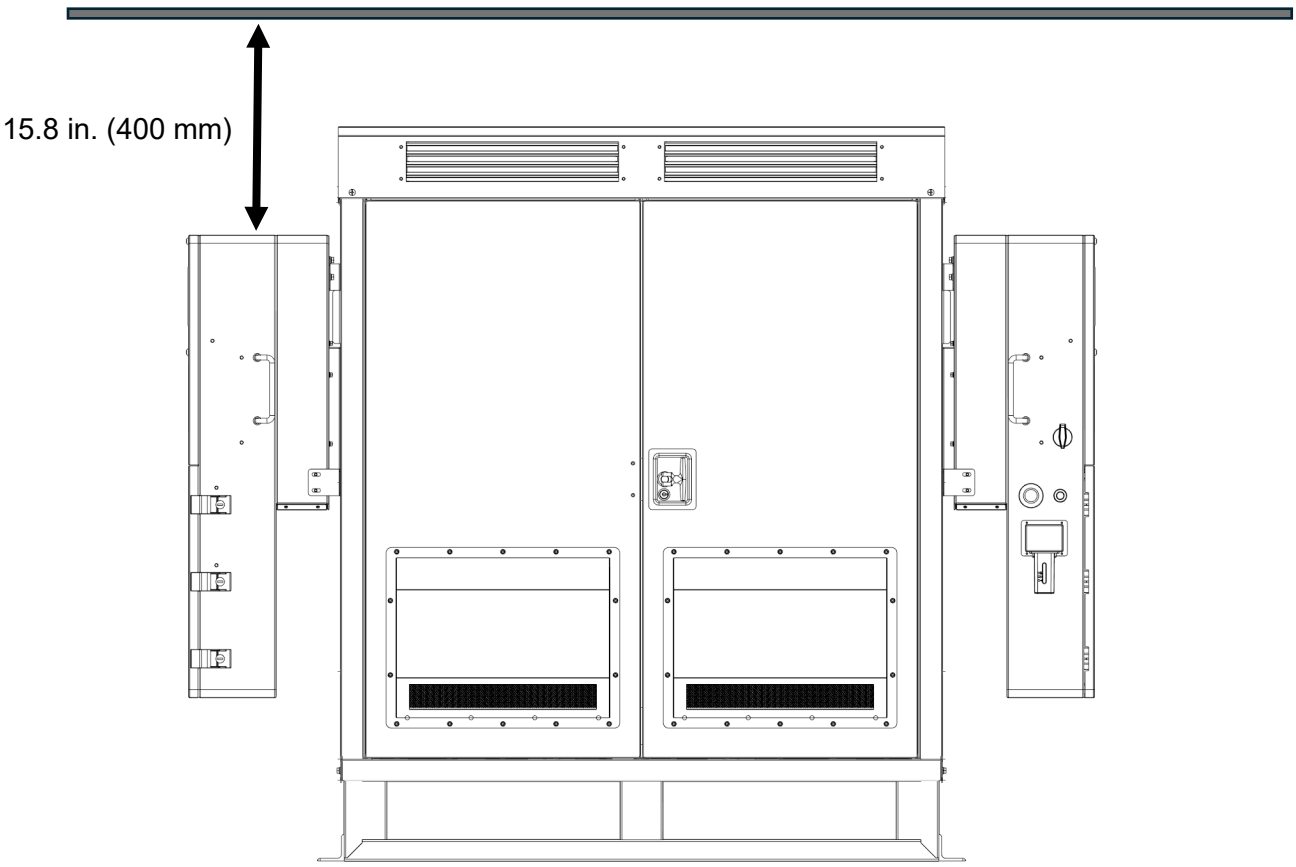

Image 8.1

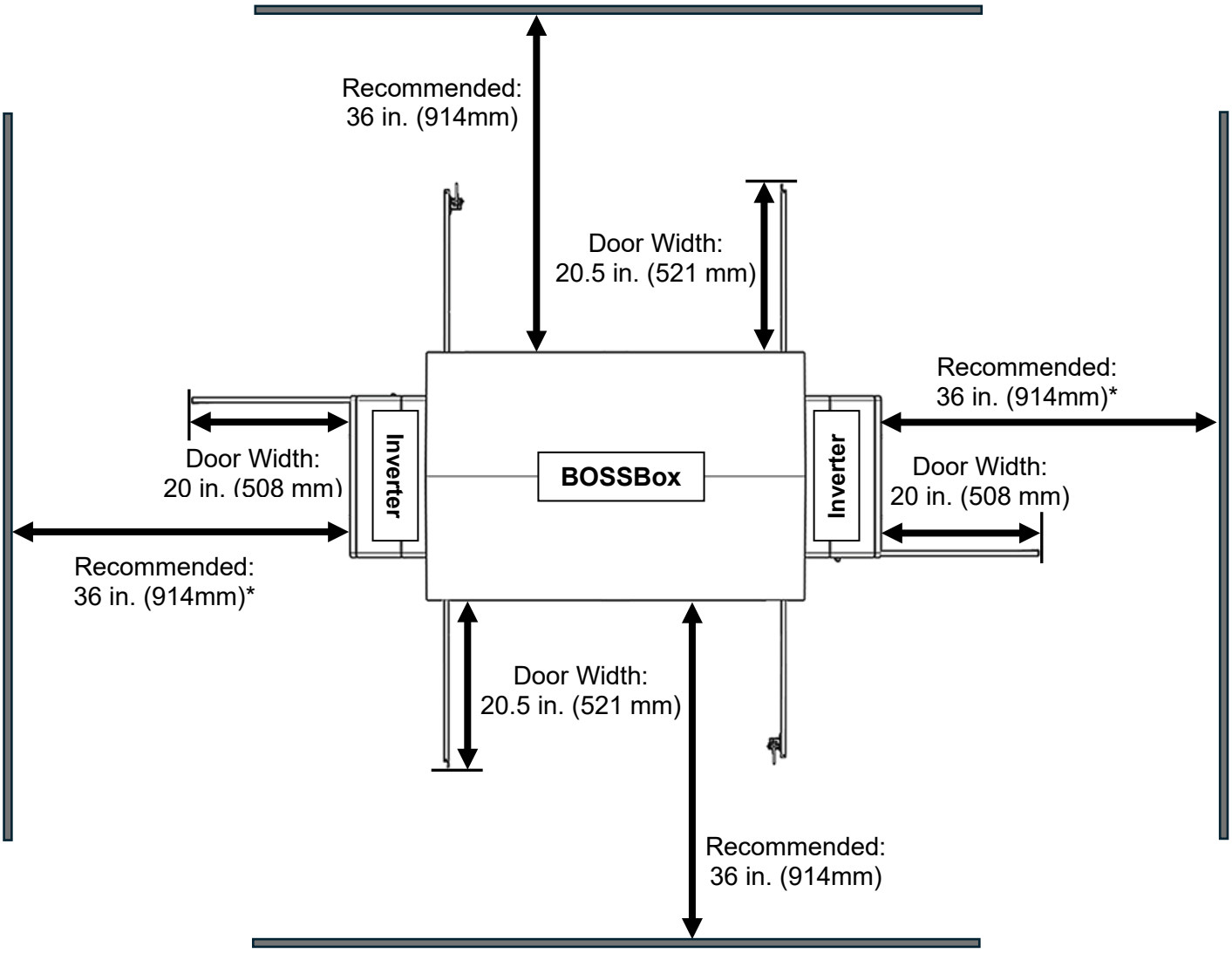

Image 8.2

***For single inverter installations, a minimum of 6 in. from wall on the non-inverter side is required to access the rear anchor bolt. Local guidelines for spacing may supersede EG4® recommended spacing requirements.

8.2 CABINET, BATTERIES, & INVERTERS

Complete the steps outlined in this section to assemble the BOSSBox cabinet. The image below refers to the cabinet's front, left, and right sides. The doors that include the air intakes are referenced as the front of the cabinet, while the back doors do not use air intakes. The left door is also slightly wider than the right door.

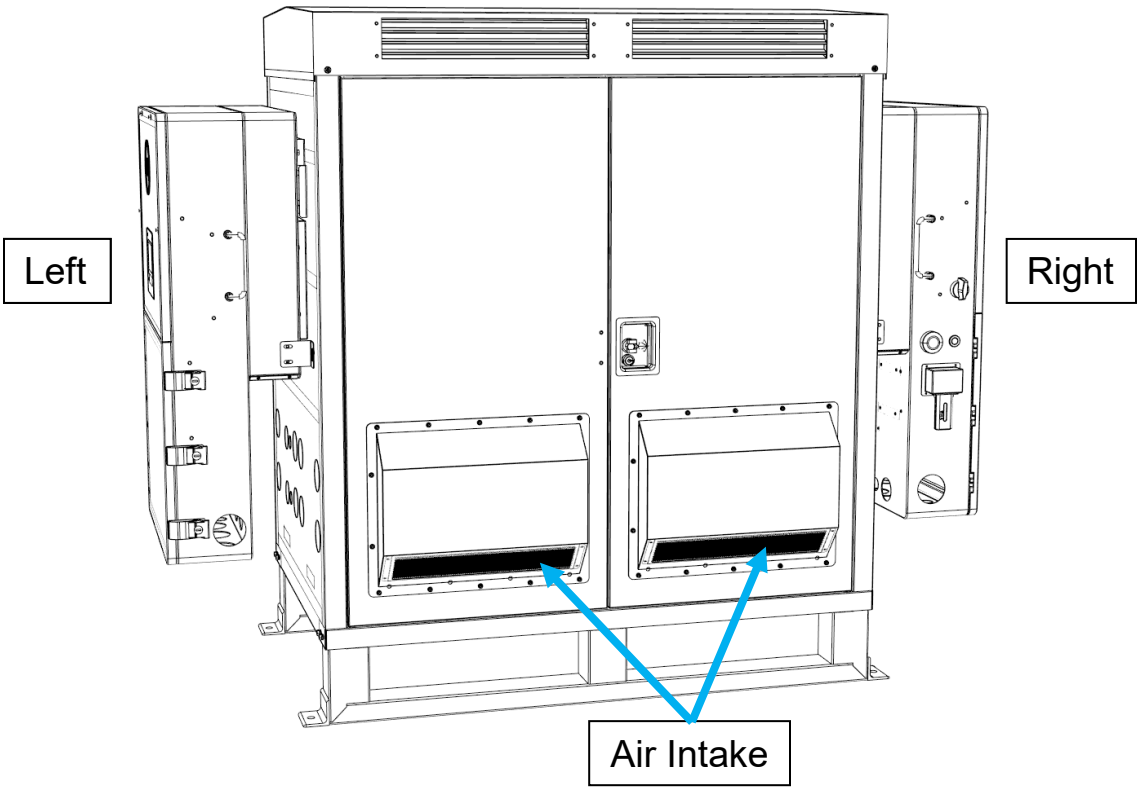

1. Locate a supported location based on section 6.1. Use the cabinet base as a template to mark the location for the four anchor bolts. Drill a ⅝ inch (16-mm) diameter hole at each mark, ensuring the holes are at least 1-9⁄16 in. (40 mm) deep. Install an M12 anchor bolt in each hole. Carefully place the cabinet base over the anchor bolts and torque the nuts to 35 ft-lbs (48Nm).

Required Components:
- Cabinet base
- M12 anchor bolt (qty: 4)

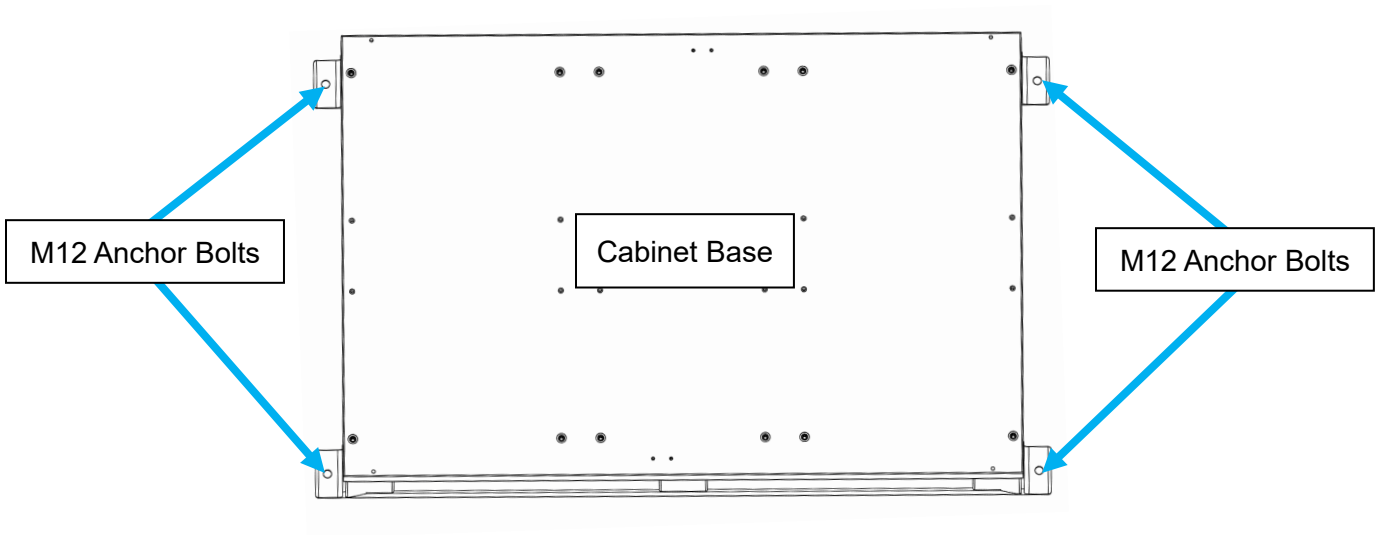

2. Drill the drain holes:

   A. If looking at the cabinet base from the top, start at the outside screw holes and draw a straight, diagonal line from the outside holes for M6x20 screws to the inner holes for M6x16 screws.

   B. If moving left to right, skip the next M6x20 screw holes and draw another straight, diagonal line to the M6x16 screw holes for the outer wall (installed in step 4).

   C. Draw a diagonal line from the M6x20 screw holes to the M6x16 screw holes.

   D. Draw a diagonal line from the M6x16 screw holes for the outer wall to the M6x16 screw holes for the inner walls.

   E. Drill a 6mm hole in the middle of each “X.”

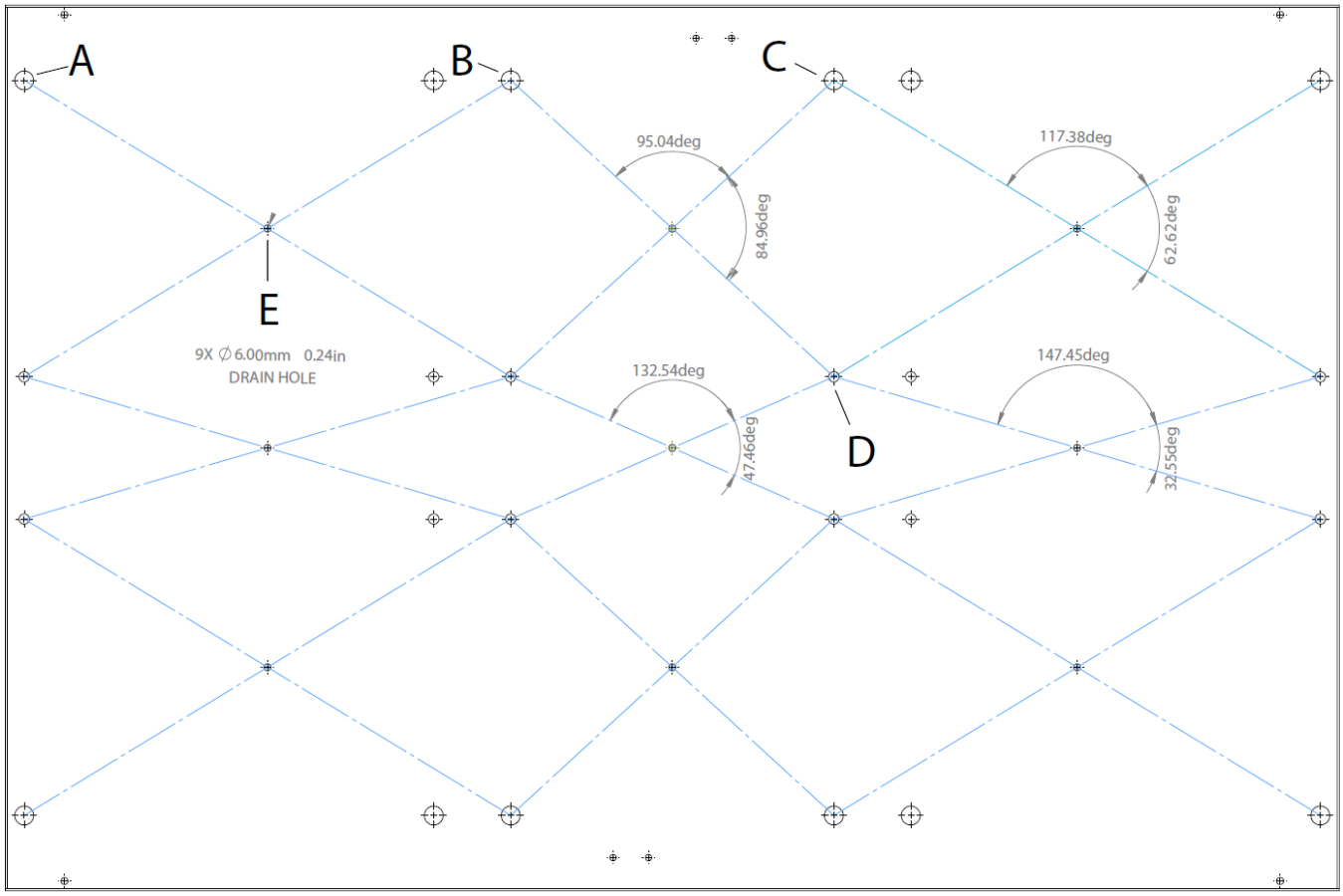

IMPORTANT:

Prior to drilling, ensure that each hole falls in line, with equal spacing to avoid being obstructed by equipment. Drain Holes are necessary for outdoor use.

3. Install the two inner walls. The inner covering is installed on one side, but all the screw holes are in identical locations, allowing the walls to be installed in any direction. Attach each inner wall to the base using eight M6x16 screws and eight M6x20 screws. The outer holes require M6x20 screws, and the inner holes require the M6x16 screws. Torque each M6 screw to 54 in-lbs. (6Nm).

Required Components:

- Inner wall (qty: 2)
- M6x16 screws (qty: 8)
- M6x20 screws (qty: 8)

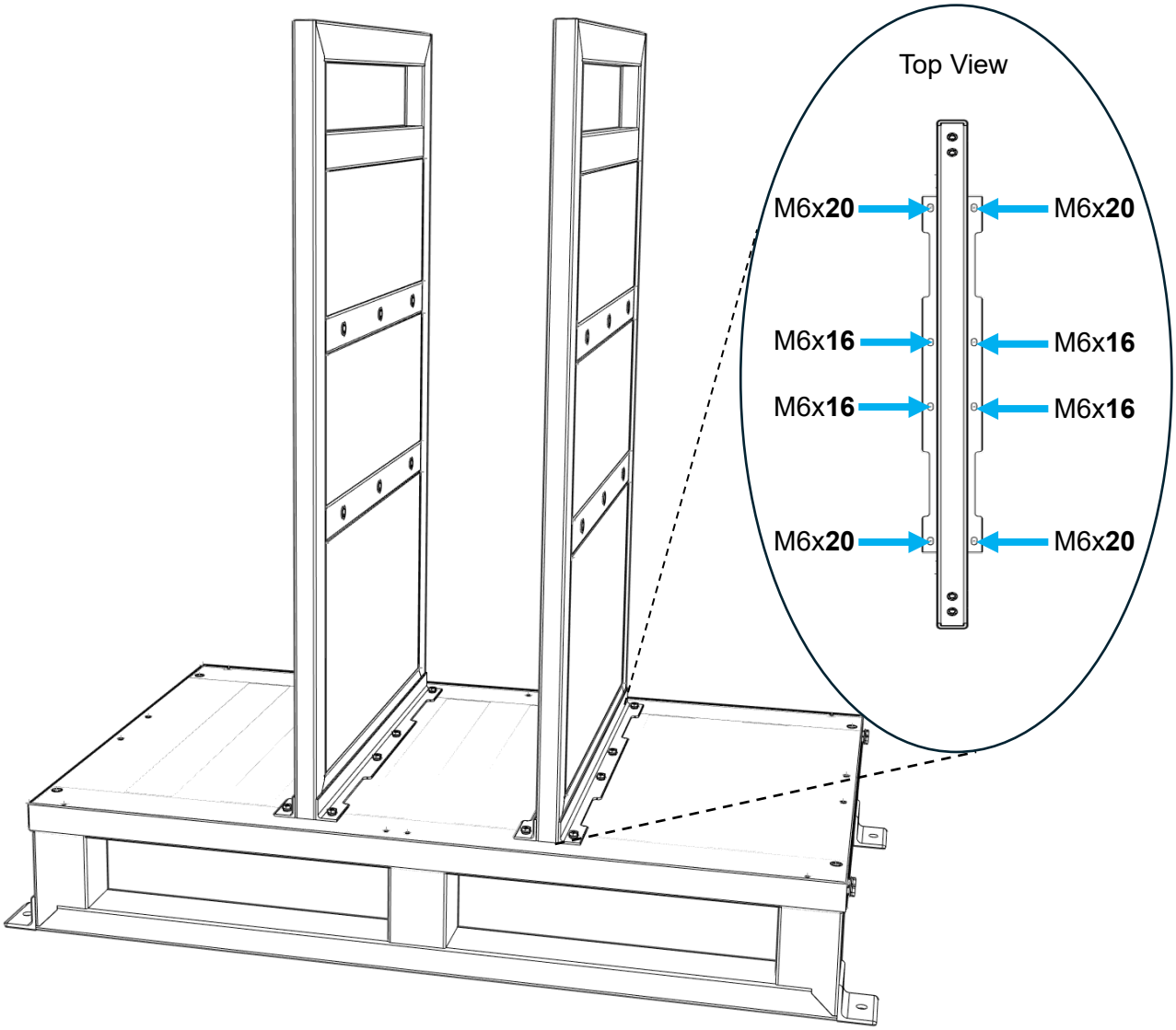

4. Install the two outer walls. The walls are identical and can be placed at either end of the base. Use four screws inside and four outside each outer wall, as shown in the images below. When inserting the four inside screws, ensure the shorter M6x16 screws are inserted in the middle two holes and the longer M16x20 screws in the outer holes. Torque each M6 screw to 54 in-lbs. (6 Nm).

Required Components:

- Outer wall (qty: 2)
- M6x16 screws (qty: 4)
- M6x20 screws (qty:12)

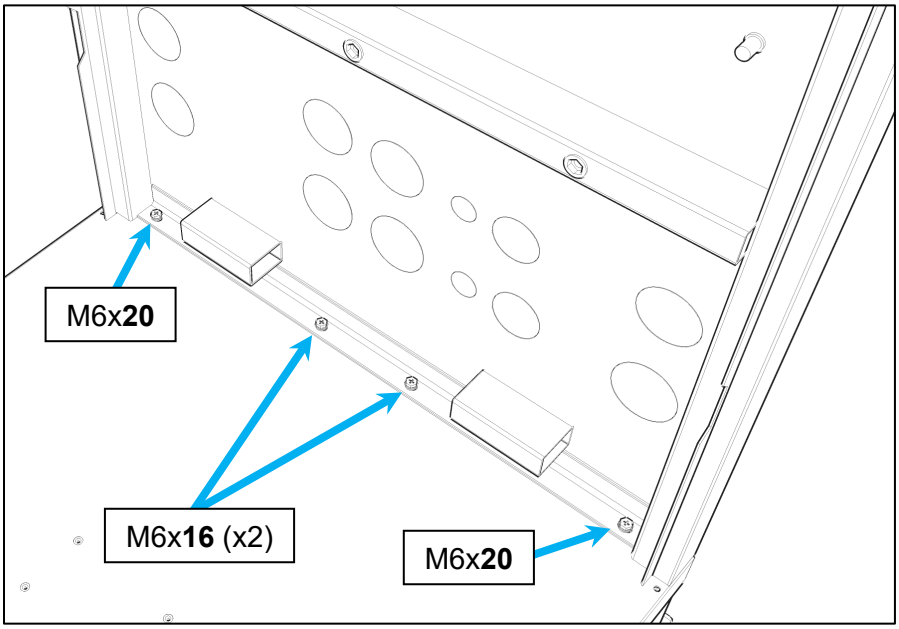

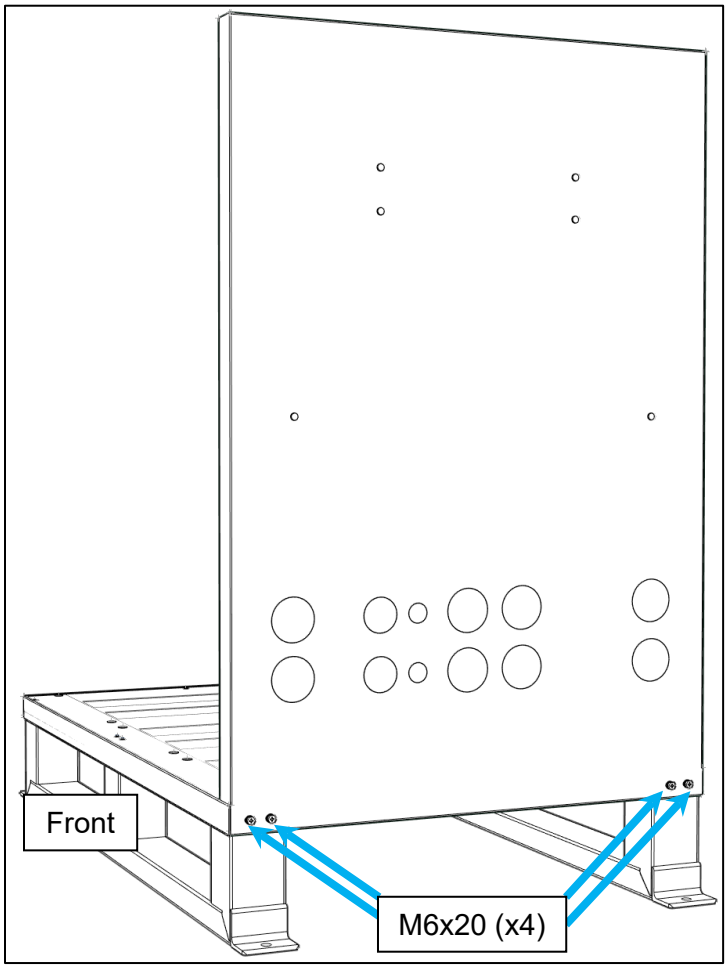

5. Install a battery bracket on each wall using six M10x25 screws for each bracket. The battery bracket is included with the battery, and the M10x25 screws are included with the BOSSBox. Verify that each battery bracket faces the same direction to ensure consistent battery polarity, which supports proper cabling. See section 7.3 for battery placement when installing less than three batteries. Torque each M10 screw to 168 in-lbs. (19Nm).

Required Components:
- M10x25 screws (qty:18)
- Battery mounting brackets (qty: 1 – 3) (included with the battery)

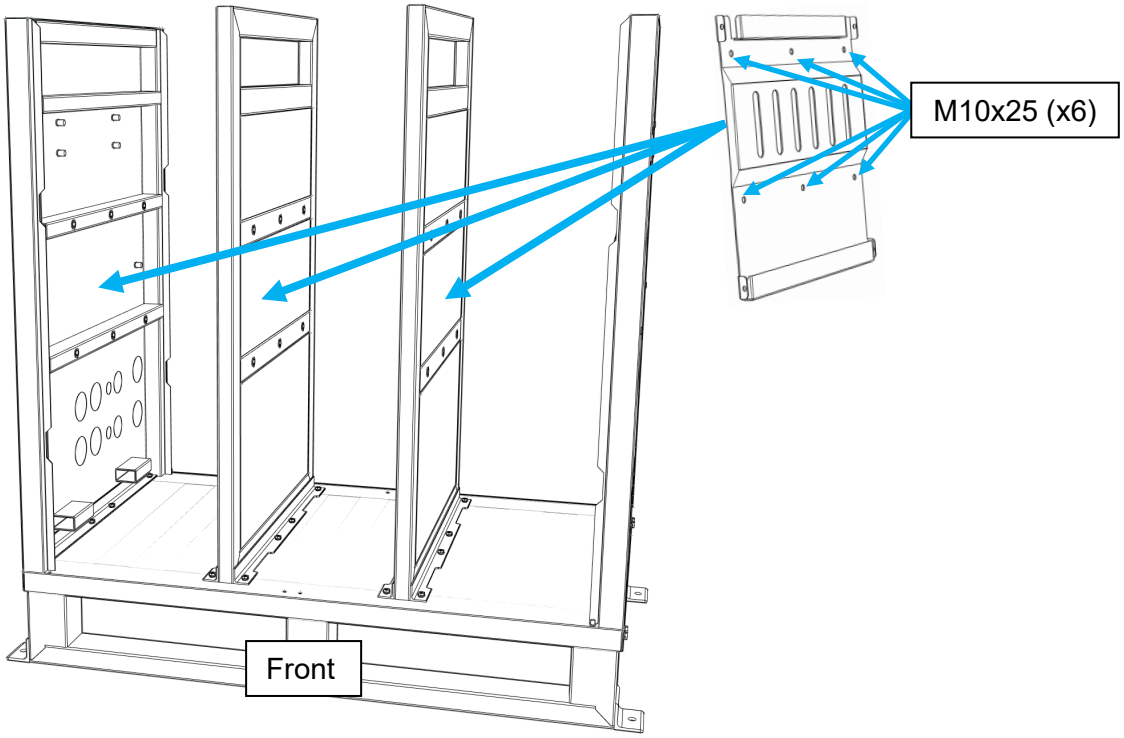

6. Using the team-lift technique with a person on each side of the battery, slide the battery or batteries into place. **Do not mount the battery onto the battery bracket.** This will be done in step 7.

Required Components:
- Battery (qty: 1 - 3)

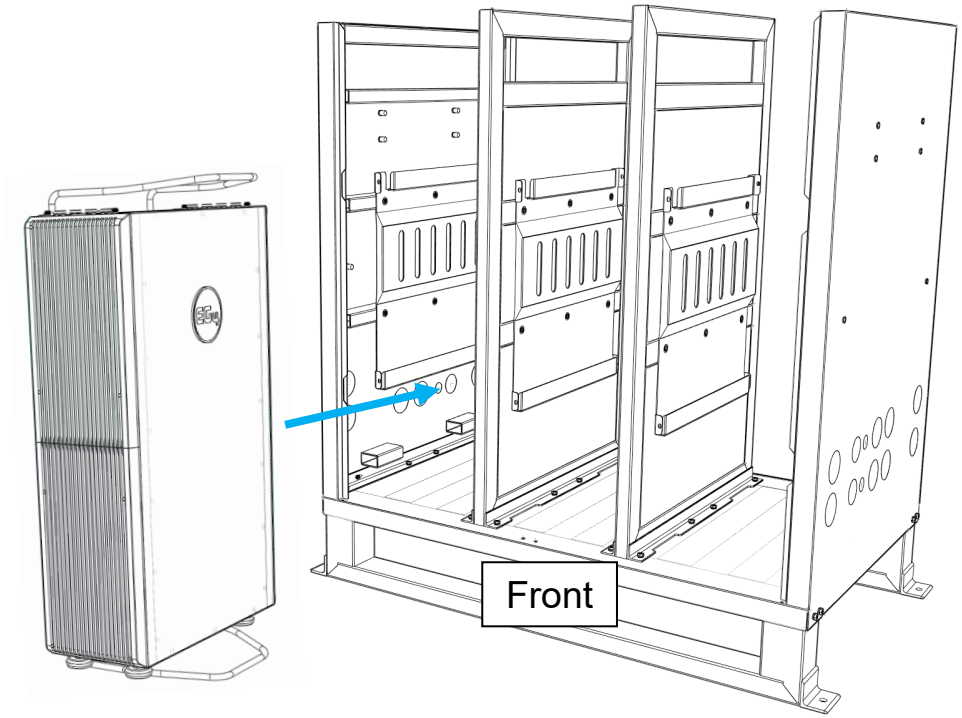

7. Set the top frame in place. Then, install the middle column brackets and screw each attachment point in place, as shown in the second image. Torque each M6 screw to 54 in-lbs. (6Nm).

Required Components:

- Top frame
- Top frame brackets (qty: 4)
- M6x20 screws (qty: 16)
- M6x35 screws (qty: 6)

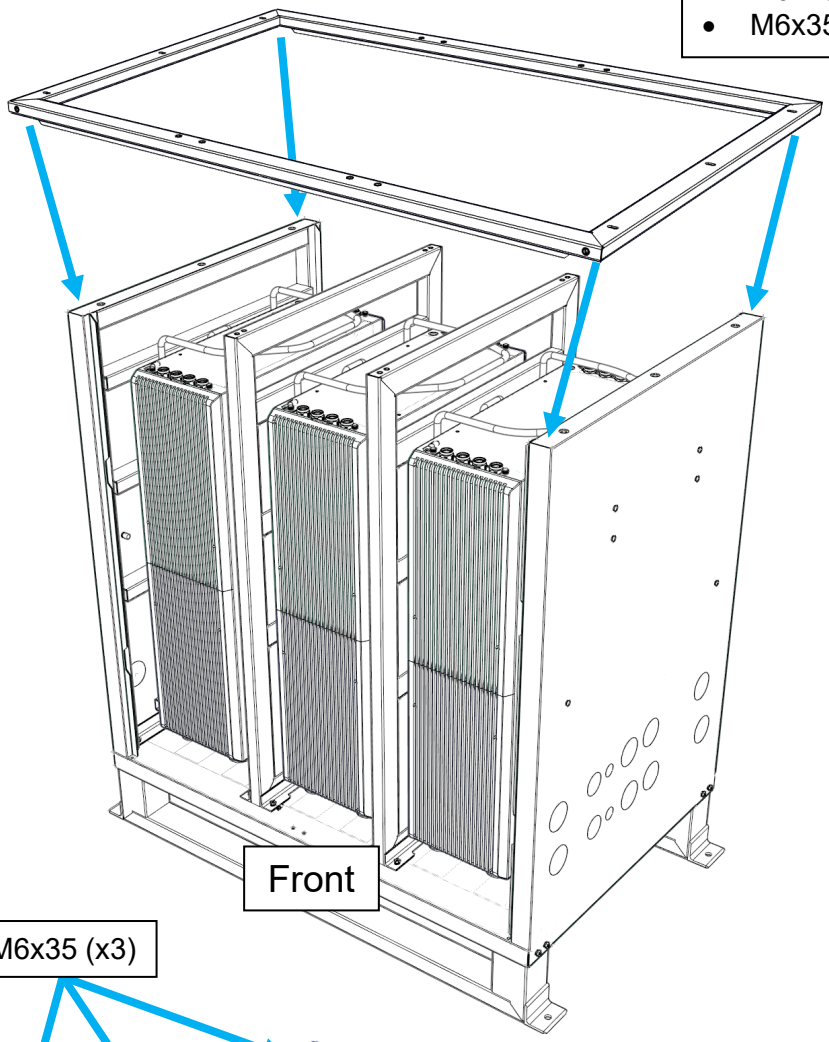

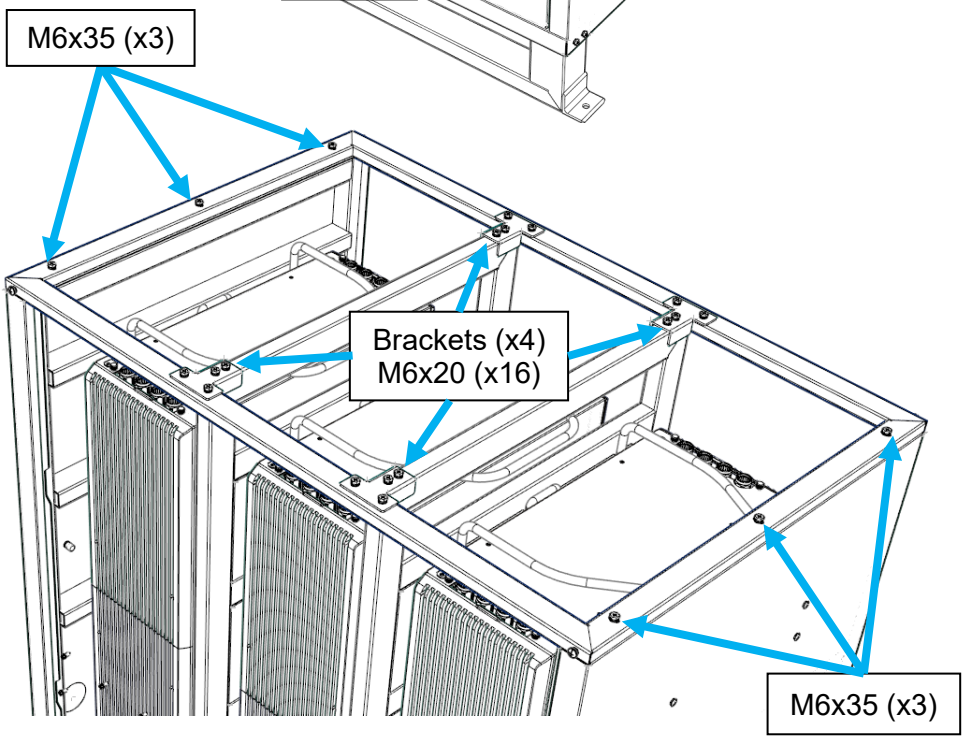

8. Mount each battery on the bracket using the team-lift technique. After the battery is mounted on the bracket, extend the leveling feet on each battery. Install the side screws in the mounting bracket, two screws per side of each bracket. Torque each M5 screw to 26 in-lbs. 3Nm).

Required Components:

- M5x14 Battery bracket screws (qty: 4 – 12) (included with the battery)

IMPORTANT:

There are two versions of the WallMount 280Ah All Weather battery. Only the battery with the adjustable feet is supported with BOSSBox. The battery with non-adjustable feet cannot be adjusted to support the weight of the battery and could cause damage to the mounting bracket and the BOSSBox.

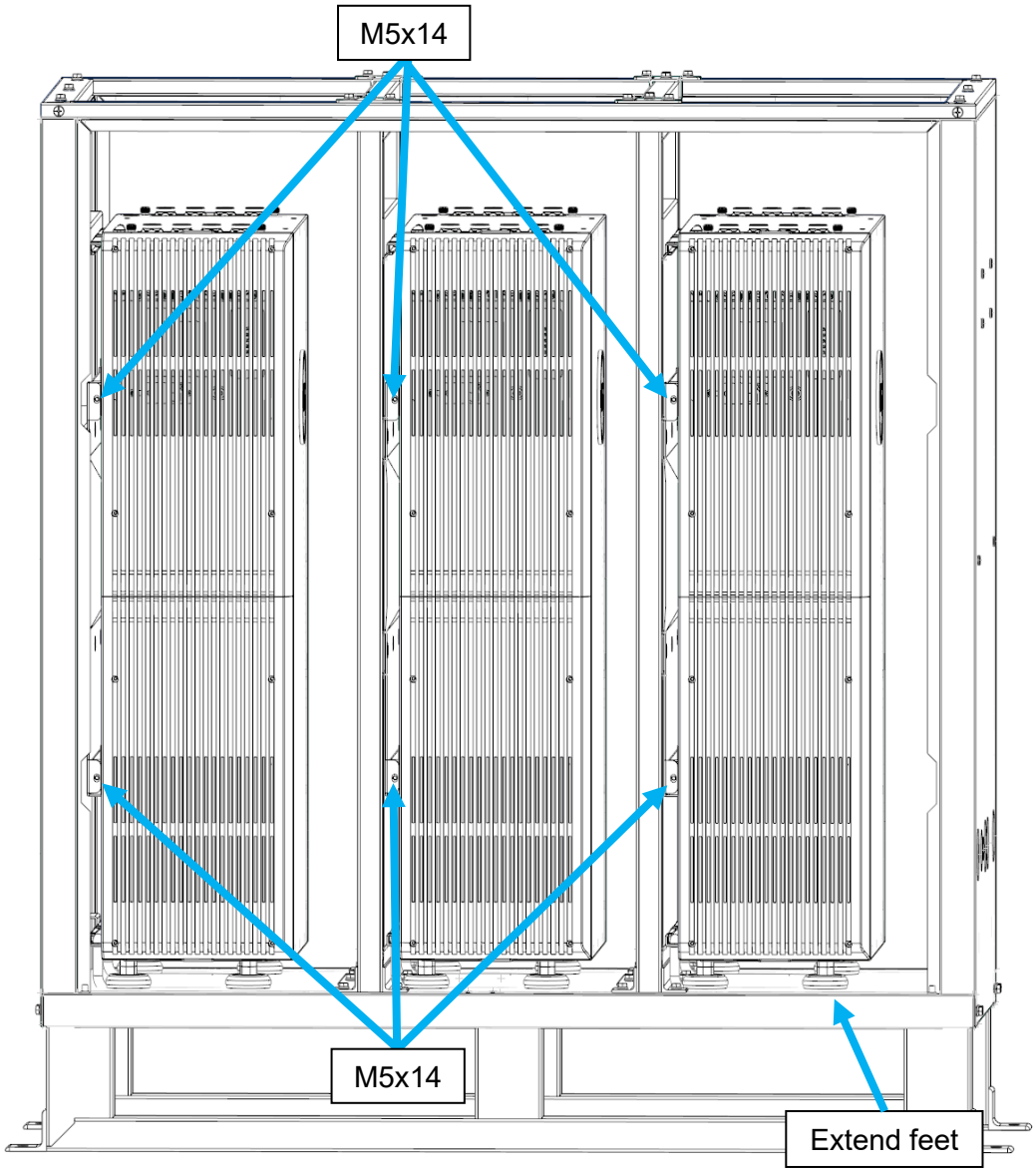

9. Remove the black rubber plugs and install the inverter brackets with the provided M8x16 bolts. Ensure the bracket is centered on the outer wall. Then, employ the team-lift technique, ensuring one person is positioned on each side of the inverter to mount it securely onto the bracket. Torque each M8 bolt to 138 in-lbs. (15Nm).

Repeat this process for the installation of a second inverter.

Required Components:

- Inverter (qty: 1 – 2)
- Inverter wall mount brackets (qty: 1 – 2) (included with the inverter)
- M8x16 bolts (qty: 6 – 12)

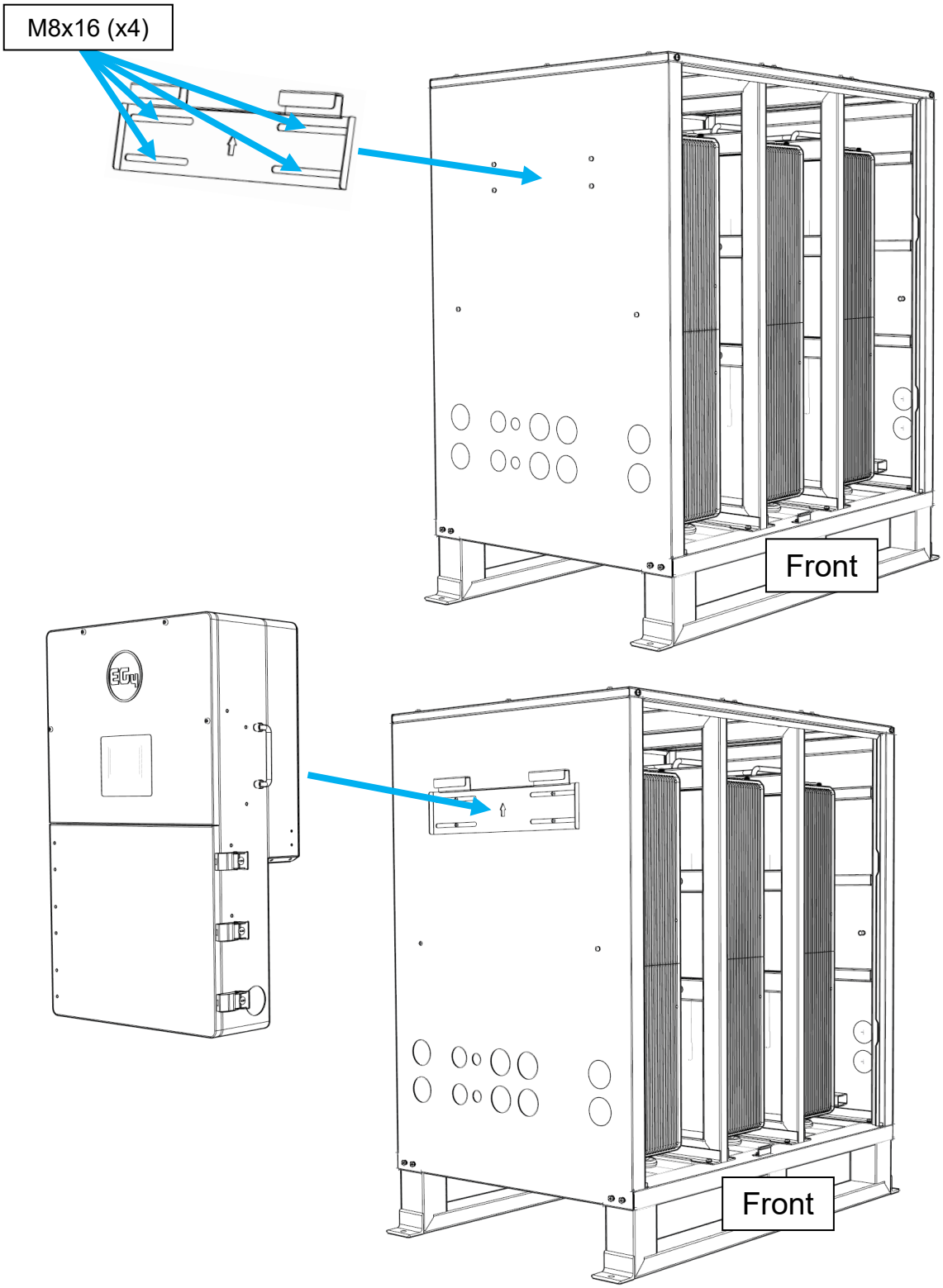

10. Remove only the required knockouts and install conduit between the inverter and cabinet to protect the battery and communication cables. The upper knockouts align with the 12kPV, the FlexBOSS18, and the FlexBOSS21, while the lower knockouts align with the 18kPV.

Required Components:
- Conduit – (not included)

IMPORTANT:
Protect all cables in metallic conduit or raceways. Exposed cables are unsafe and violate the NEC code.

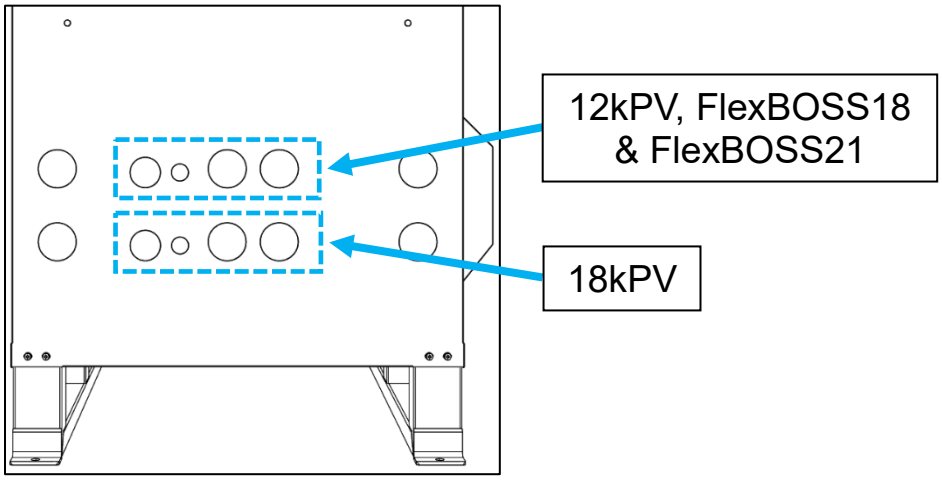

11. After the conduit is in place, install the L-brackets on each side of the inverter. Use the four screws included with the inverter to attach the L-bracket to the inverter. Use the included M8x16 bolts to attach the L-bracket to the BOSSBox outer wall. Torque each M8 bolt to 138 in-lbs. (15Nm).

Required Components:
- L-brackets (qty: 2 – 4) (included with the inverter)
- L-bracket inverter screws (qty 4 – 8) (included with the inverter)
- L-bracket M8x16 bolts (qty: 2 – 4)

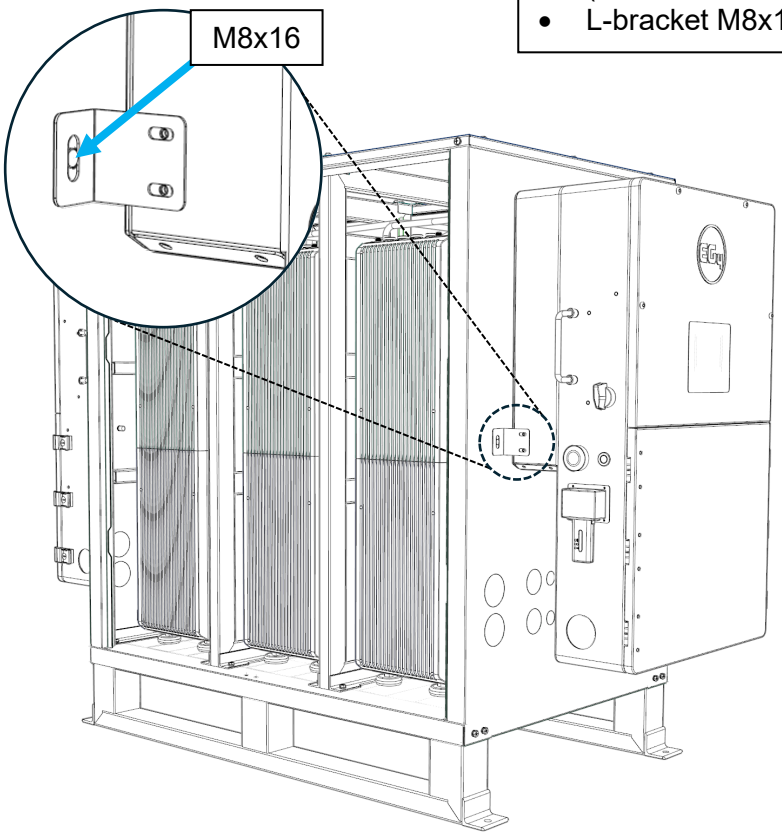

12. Route the battery and communication cables as described in section 7.3 based on the inverter and battery quantity installed.

13. Verify that the six latches of the top frame are in the down position. Next, set the top cover in place and install the four M6x16 screws, one to each corner of the cabinet top. Lastly, use the six interior latches to connect the top frame to the top cover. Torque each M6 screw to 54 in-lbs. (6Nm).

Required Components:
- Cabinet Top
- M6x16 screws (qty: 4)

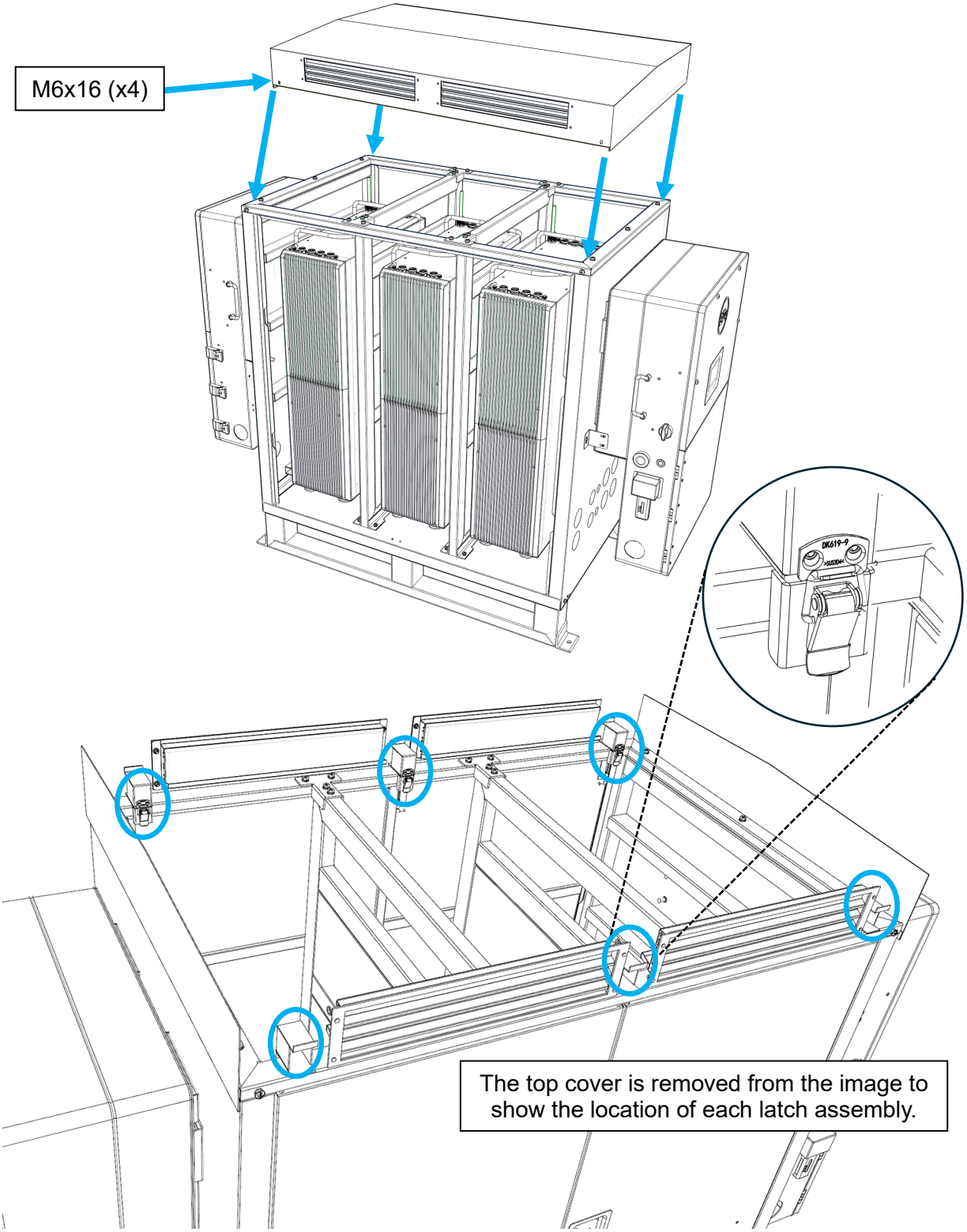

14. Install the doorstop on each side of the cabinet. The bracket should be installed with the flat side of the bracket towards the doors and the screw holes to the inside of the cabinet. Torque each M4 screw to 14 in-lbs. (1.5Nm).

Required Components:
- Doorstop (qty: 2)
- M4x10 screws (qty: 4)

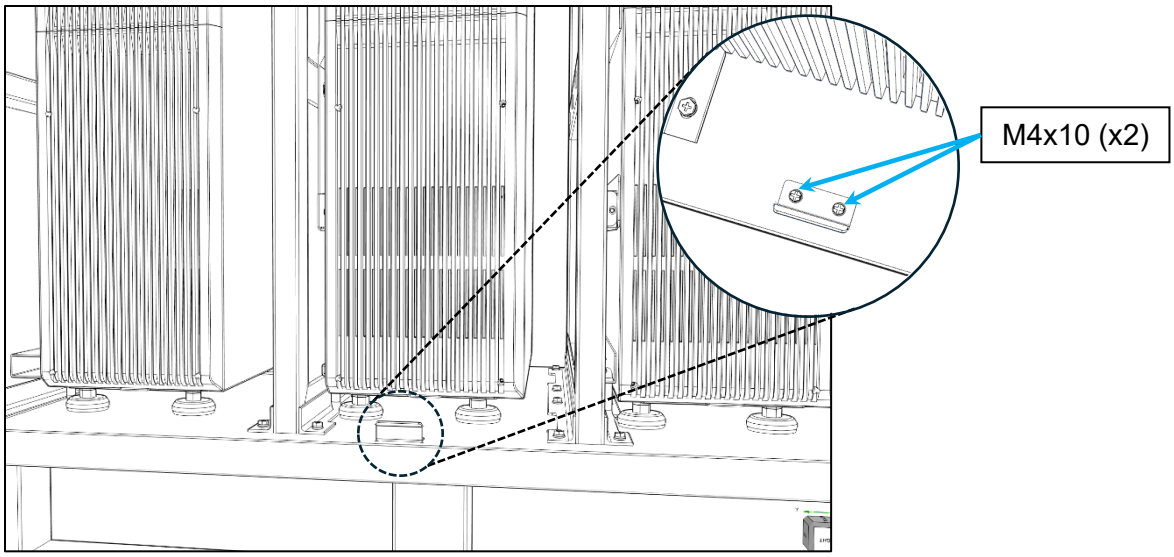

15. Install the front and back left door panels. (1) Insert the bottom left corner of the door into the cabinet base. (2) Align the upper left corner of the door to the upper slot while pulling down on the spring latch. Once the upper corner is aligned, release the spring latch to secure the door. (3) Push the door closed while pulling in the upper and lower spring latches. Once the door is closed, release both spring latches to secure the door. The closeup images illustrate the spring latches located inside the doors.

Required Components:
- Left door (qty: 2)

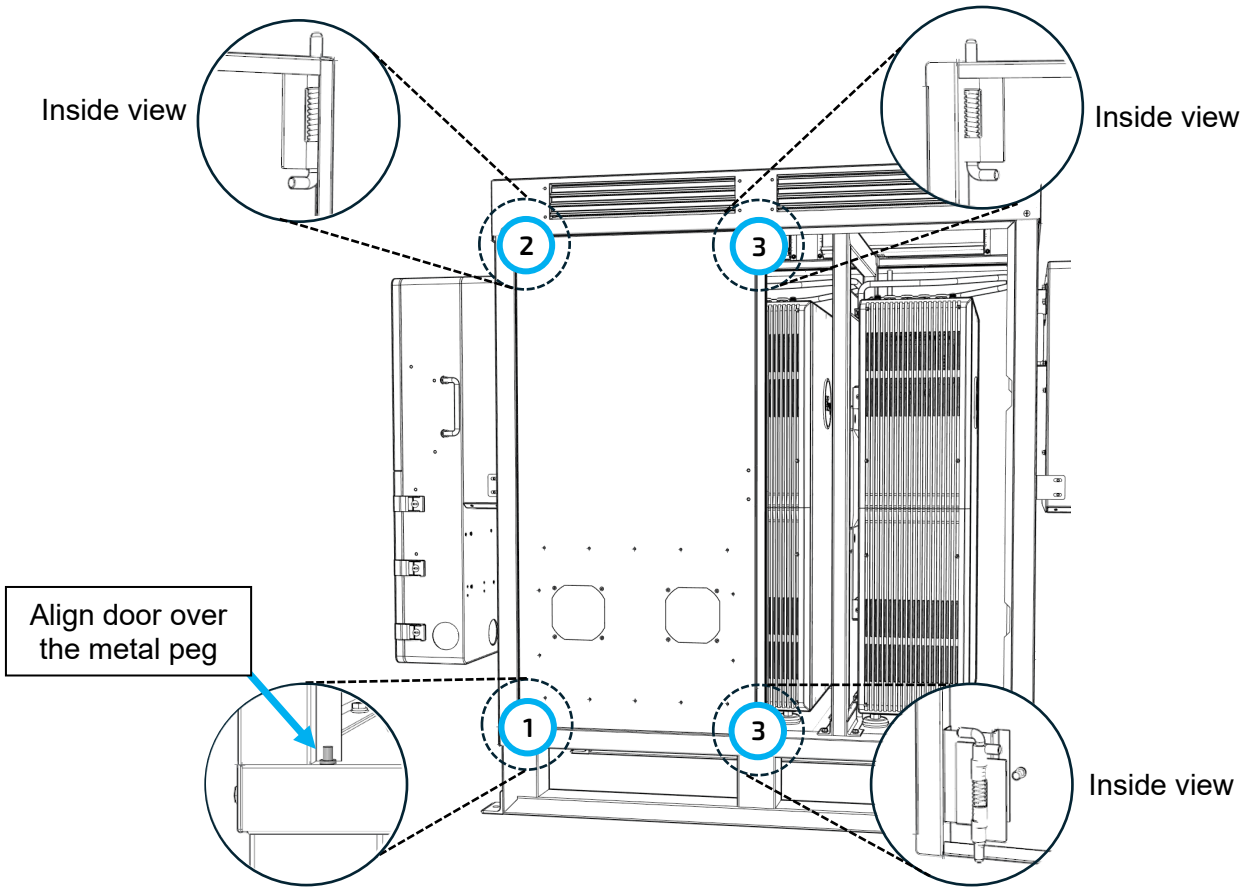

16. Use the two M4 flange nuts to install the lock catch inside the front and back left door panels. Torque each M4 nut to 14 in-lbs. (1.5Nm).

Required Components:
- Lock catch (qty: 2)
- M4 flange nuts (qty: 4)

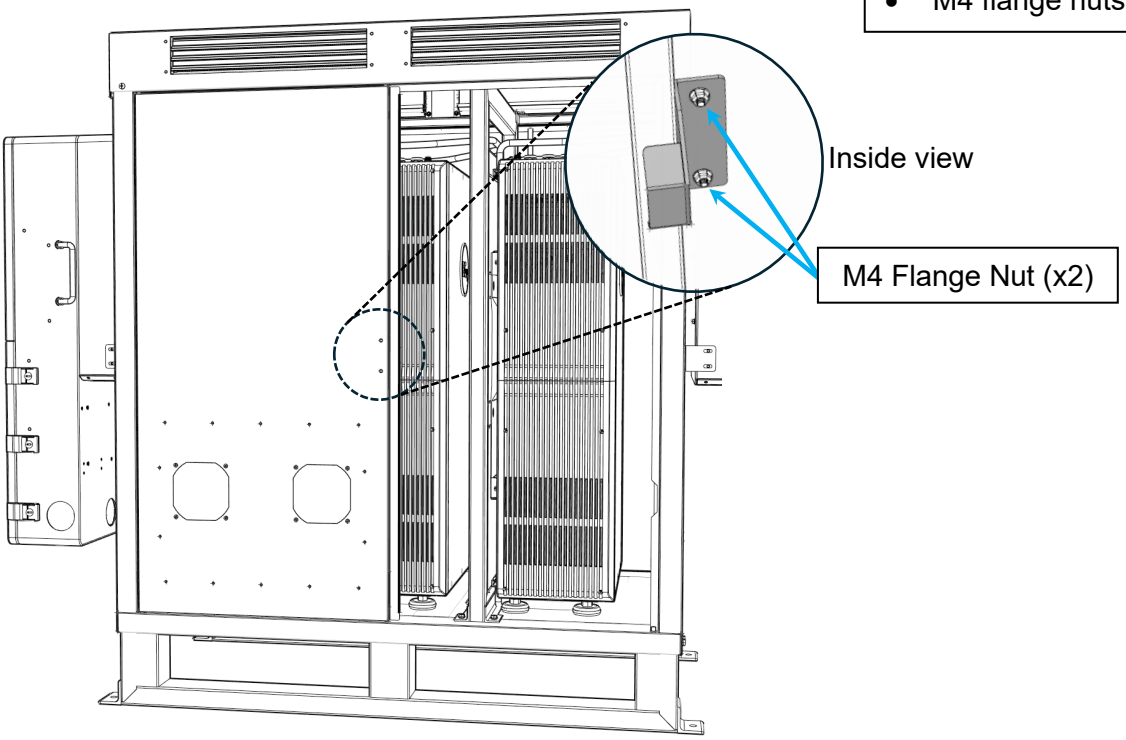

17. Install the right door panels on the front and back of the cabinet. (1) Set the lower corner of the door on the base. (2) While holding the spring latch down, install the upper corner of the door, and then release the spring latch to hold the door in place.

Required Components:
- Right door (qty: 2)

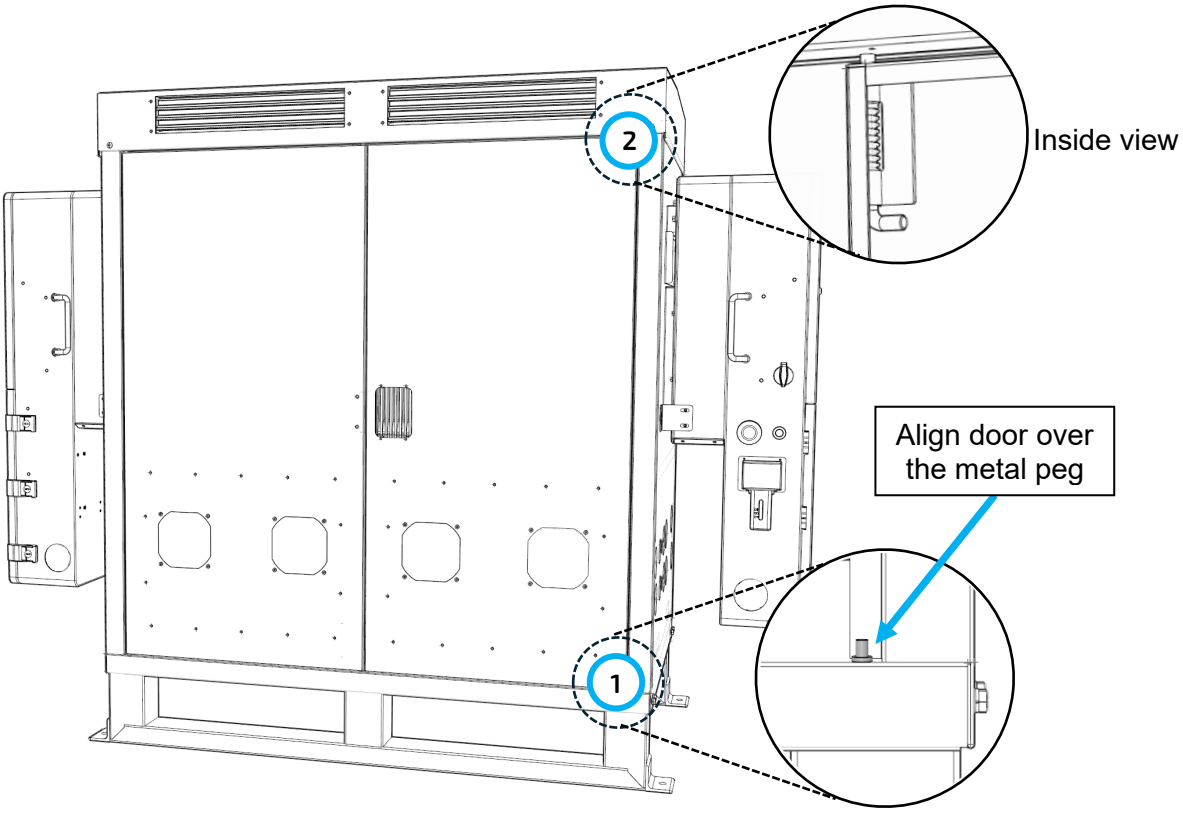

18. Install the lock assembly in the right door panels using the M4x12 screws and M4 flange nuts, as shown in the callout image below. Torque each M4 nut to 14 in-lbs. (1.5Nm).

Required Components:
- Lock assembly (qty: 2)
- M4 flange nuts (qty: 8)
- M4x12 screws (qty: 8)

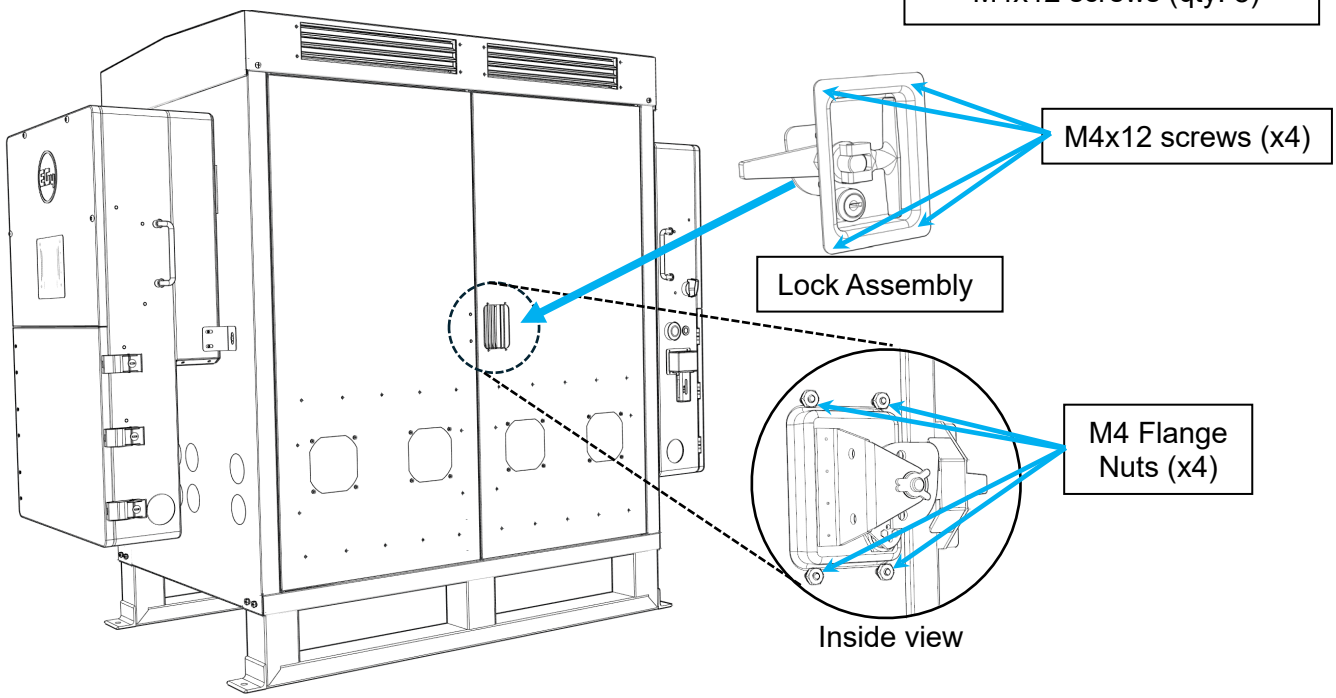

19. Install the air intake covers on the cabinet's front or back doors using fourteen M4x10 screws to secure each intake. Be sure to remove the air inlet knockouts (KO in the image below) on each door where the intake covers will be installed. Only remove the knockouts on the doors that use the intake covers. Torque each M4 screw to 14 in-lbs. (1.5Nm).

Required Components:
- Air Inlets (qty: 2)
- M4x10 screws (qty: 28)

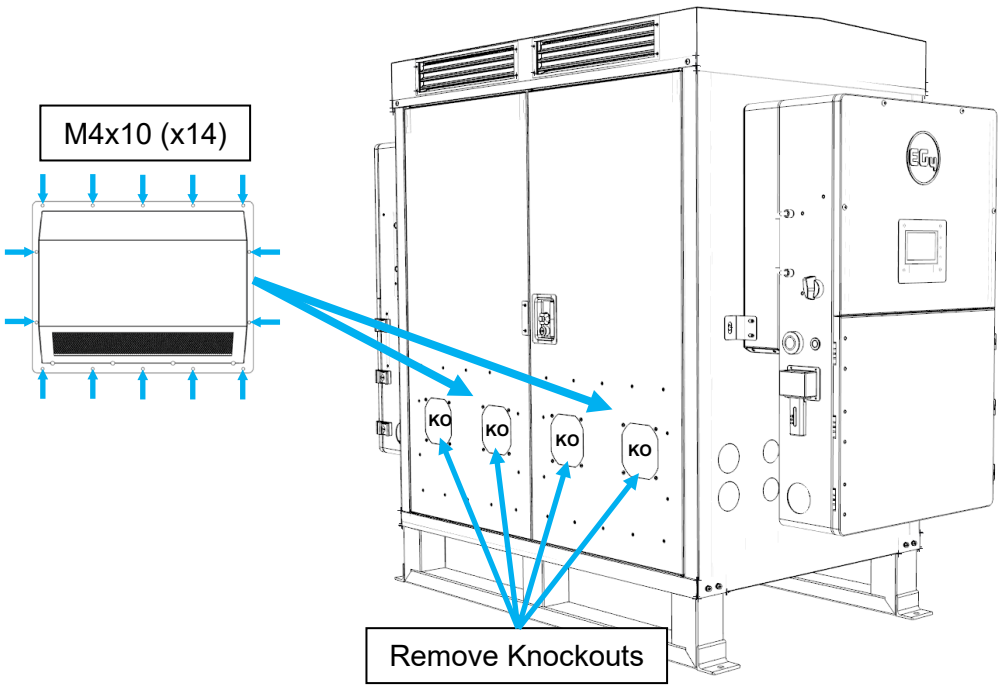

20. Complete the installation by installing the AC output cables, AC input cables, solar panel input cables, and any other required cabling using the applicable EG4 manuals, which are linked below.

12kPV Inverter	18kPV Inverter	FlexBOSS18 Inverter	FlexBOSS21 Inverter	WallMount 280Ah AW Battery

9. MAINTENANCE

To maintain the serviceable BOSSBox components, follow the steps below:

1. Inspect the door hinges to confirm they are operating smoothly. Add oil to the hinges as needed.
2. Lubricate the door lock as needed to ensure smooth operation.
3. Inspect and clean the air inlet filters as needed.
4. Touch up any areas of damaged paint to prevent corrosion.
5. Check for water intrusion after heavy rain, based on the installation location.
6. Check for pooling water at the BOSSBox installation location after heavy rain.

Contact the distributor's technical support team if additional information is needed.
Phone: 903-609-1988
Email: support@eg4electronics.com

10. CHANGELOG

V1.1.1

- Removed UN38.3 certification

V1.1

- Added instructions for drilling drain holes
- Added additional safety/warning information.

V1.0

- Published user manual

NOTES

CONTACT US

support@eg4electronics.com
(903) 609-1988
www.eg4electronics.com