EG4® FLEXBOSS18 HYBRID INVERTER

USER MANUAL

©2026 EG4® ELECTRONICS, LLC. ALL RIGHTS RESERVED.
VERSION 1.1.3 | INFORMATION SUBJECT TO CHANGE WITHOUT NOTICE.
MODEL #: IV-13000-HYB-AW-FX-**XX** (**XX** is a number between 00-99)

EG4

TABLE OF CONTENTS

1. LIST OF TABLES 1
2. TABLE OF FIGURES 2
3. TECHNICAL SPECIFICATIONS 4
4. ABBREVIATIONS 7
5. SAFETY 8
   5.1 SYMBOLS USED IN MANUAL 8
   5.2 SYMBOLS USED ON EQUIPMENT 8
   5.3 SAFETY INSTRUCTIONS & NOTIFICATIONS 9
6. SÉCURITÉ 11
   6.1 SYMBOLES UTILISÉS DANS LE MANUEL 11
   6.2 SYMBOLES UTILISÉS SUR L'ÉQUIPEMENT 11
   6.3 CONSIGNES DE SÉCURITÉ ET AVIS 12
7. PRODUCT OVERVIEW 18
   7.1 PACKING LIST 18
   7.2 FEATURES 19
   7.3 OPERATION OVERVIEW 20
   7.4 DIMENSIONS 23
   7.5 STORING THE INVERTER 25
8. GENERAL INSTALLATION 26
   8.1 RECOMMENDED TOOLS 26
   8.2 LOCATION REQUIREMENTS 27
   8.3 MOUNTING THE INVERTER 28
   8.4 CABLE INSTALLATION 31
   8.5 INITIAL STARTUP & CONFIGURATION 41
9. REMOTE MONITORING CONFIGURATION 45
   9.1 DONGLE FCC ID'S 45
   9.2 WI-FI DONGLE INSTALLATION 45
   9.3 NEW USER ACCOUNT 46
   9.4 EXISTING USER ACCOUNT 48
10. MONITORING CENTER OVERVIEW 49
   10.1 WORKING MODES AND WEATHER OPTIMIZATION SETTINGS 49
11. POWER CONTROL SYSTEM 57
   11.1 EXPORT LIMITING FROM ALL SOURCES (PEL) 57
   11.2 ESS MODE 60
12. RAPID SHUTDOWN/ESS DISCONNECT 62
   12.1 OVERVIEW 62
   12.2 EXTERNAL RSD/ESS DISCONNECT 62
13. WORKING WITH A GRIDBOSS 63
14. INVERTER MAINTENANCE 64
   14.1 START-UP & SHUTDOWN PROCEDURES 64
   14.2 FIRMWARE UPDATES VIA THE EG4® ELECTRONICS APP 65
   14.3 FIRMWARE UPDATE VIA MONITORING CENTER (WEBSITE) 65
15. INVERTER TROUBLESHOOTING 66
   15.1 FAULT DEFINITIONS & TROUBLESHOOTING 67
   15.2 ALARM DEFINITIONS & TROUBLESHOOTING 69
16. STANDARDS AND CERTIFICATIONS 71
17. CHANGELOG 72

1. LIST OF TABLES

Table 7.1 – Inverter Overview 20
Table 7.2 – Inverter Cable Box Overview 21
Table 7.3 – Inverter Communication Board 22
Table 7.4 – Inverter Knockouts 24
Table 8.1 – Mid-Doc Table Caption 7 Column 32
Table 8.2 – Lithium Battery PIN 34
Table 8.3 – Cable Size 35
Table 8.4 – PV Connections 35
Table 8.5 – AC Connections 38
Table 8.6 – CT Port 40
Table 9.1 – Dongle FCC ID's 45
Table 11.1 – ESS Mode 60
Table 11.2 – Mode Descriptions 61
Table 13.1 – Working with a GridBOSS 63
Table 15.1 – Inverter Troubleshooting 66
Table 15.2 – Fault Troubleshooting 67
Table 15.3 – Alarm Troubleshooting 69

2. TABLE OF FIGURES

Figure 7.1 – Inverter Packing List 18
Figure 7.2 – Inverter Overview 20
Figure 7.3 – Inverter Cable Box Overview 21
Figure 7.4 – Inverter Communication Board 22
Figure 7.5 – Inverter Dimensions 23
Figure 7.6 – Inverter Knockouts 24
Figure 7.7 – Storage Information 25
Figure 8.1 – Recommended Tools & PPE 26
Figure 8.2 – Install Spacing 27
Figure 8.3 – Environmental and Mounting Requirements 27
Figure 8.4 – Mounting Bracket Slots Spacing 28
Figure 8.5 – Mounting Steps 1, 2, 3 & 4 29
Figure 8.6 – Mounting Steps 5, 6, 7 & 8 30
Figure 8.7 – Connection Overview 31
Figure 8.8 – Cable Installation 32
Figure 8.9 – Battery Communication Cable Connections 33
Figure 8.10 – Lithium Battery Connections 34
Figure 8.11 – PV Wiring 36
Figure 8.12 – String Sizing 37
Figure 8.13 – Steps for AC Connection 39
Figure 8.14 – CT Port 40
Figure 8.15 – CT Orientation 41
Figure 8.16 – Connection 41
Figure 8.17 – Single Inverter Startup 42
Figure 8.18 – System Information 42
Figure 8.19 – Parallel System Connection 43
Figure 8.20 – Parallel System Connection 2 43
Figure 9.1 – Dongle 45
Figure 9.2 – New Account on Monitor Center 46
Figure 9.3 – New Account on APP 46
Figure 9.4 – Add Dongle in APP 47
Figure 9.5 – Set the Wi-Fi Password 47
Figure 9.4 – Monitor Center Sign In 48
Figure 9.5 – Adding a Dongle 48
Figure 10.1 Weather Optimize Function 1 50
Figure 10.2 – Weather Optimize Function 2 50
Figure 10.3 – Weather Optimize Function 3 51
Figure 10.4 – Weather Optimize Function 4 51
Figure 10.5 – Working Modes 52
Figure 10.6 – Backup Mode 52
Figure 10.7 – Peak shaving 53
Figure 10.8 – AC Charge Mode 54
Figure 10.9 – PV Charge Priority 55

Figure 10.10 – Forced Discharge/ Export PV Only....55
Figure 10.11 – Self Consumption....56
Figure 11.1 – Zero Export....57
Figure 11.2 – Discharge Current Limit (A)....58
Figure 11.3 – Discharge Power (kW)....58
Figure 11.4 – Schematic Diagram....60
Figure 12.1 – RSD/ESS Disconnect....62
Figure 12.2 – External Disconnect....62
Figure 14.1 – Firmware Update Via App....65
Figure 15.1 – Event History....66

3. TECHNICAL SPECIFICATIONS

INVERTER	
MODEL #	IV-13000-HYB-AW-FX-**XX** (**XX** is a number between 0-99)
CEC MODEL #	IV-13000-HYB-AW-FX-XX (240V) / IV-13000-HYB-AW-FX-XX (208V)
TYPE	Hybrid
DESIGN TOPOLOGY	High Frequency - Transformerless
AC SYSTEM	
NOMINAL VOLTAGE	120/240 or 208 VAC
FREQUENCY	50/60Hz
PHASE SUPPORT	1ø
AC OUT	
NOMINAL OUTPUT VOLTAGE	120/240 or 208 VAC (L1/L2/N required)
MAX. CONTINUOUS OUTPUT	54A | 13kW
MAX. CONTINUOUS OUTPUT – BATTERY ONLY	41.67A | 10kW
MAX. CONTINUOUS OUTPUT – PV AND GRID @25C	41.67A | 13kW
PEAK POWER	20000W (.5 sec) | 15000W (1 sec) | 13500W (1 min) | 12500W (6 min) 11000W (12 min)
LOCKED ROTOR AMPS	195A
MAX. CONTINUOUS OUTPUT PER-LEG	41.67A | 5kW
POWER FACTOR	.99 @ Full Load
MAX. PASS-THRU CURRENT FROM GRID	90A
REACTIVE POWER ADJUST RANGE	+0.8/-0.8
THDV	<5%
MAX. APPARENT POWER WITH BATTERY	10kVA
MAX. APPARENT POWER WITH PV AND GRID	13kVA
AC IN	
NOMINAL GRID VOLTAGE	120/240 VAC | 120/208 VAC (L1/L2/N required)
MAX. GRID INPUT POWER (TO INVERTER W/O PASS-THRU)	41.67A | 10kW
MAX. GRID CIRCUIT RATING (W/ PASS-THRU)	90A
MAX. INPUT SHORT CIRCUIT CURRENT RATING	10kA

BATTERY	
NOMINAL VOLTAGE	51.2 VDC
OPERATING VOLTAGE RANGE	40 – 60 VDC
MAX. CHARGE CURRENT (DC AMPS)	208 ADC
MAX. DISCHARGE CURRENT (DC AMPS)	208 ADC
COMPATIBLE BATTERIES	See EG4 website
PV DC IN	
NO. OF MPPTS	2
RATED CURRENT PER MPPT	26A (MPPT 1) | 26A (MPPT 2)
INPUTS PER MPPT	3 | 2 (MPPT 1) | 2 (MPPT 2)
SHORT-CIRCUIT CURRENT RATING PER MPPT	31A (MPPT 1) | 31A (MPPT 2)
MAX. DC INPUT VOLTAGE	600 VDC
MPPT DC STARTUP VOLTAGE	200 VDC
MPPT FULL POWER VOLTAGE RANGE	250 – 440 VDC (360 VDC optimal)*
MPPT DC OPERATIONAL VOLTAGE RANGE	120 – 440 VDC
RECOMMENDED MAX. SOLAR ARRAY POWER (STC)	18kW
MPPT VOLTAGE HIGH PROTECTION	550 VDC**

**When sizing the system, it is best practice to follow the MPPT full power voltage.*
See https://eg4electronics.com/wp-content/themes/hello-elementor/eg4-solar-panel-string-sizer/ for the EG4® String Sizing Tool.
***The value at which the inverter will fault out to protect the MPPT from over voltage.*

RESPONSE	
TRANSFER TIME (GRID TO BATTERY SWITCHING TIME)	20ms (Default) | 10ms (Configurable)
OPEN LOOP RESPONSE TIME (OLRT)	<2 seconds
TIME TO STEADY STATE	<10 seconds
EFFICIENCY	
CEC WEIGHTED EFFICIENCY	97%
MAX. EFFICIENCY: PV TO GRID/LOAD	97%
MAX. EFFICIENCY: BATTERY TO GRID/LOAD	94%
MAX. EFFICIENCY: PV TO BATTERY	94.5%
MAX. EFFICIENCY: AC TO BATTERY	94%
IDLE CONSUMPTION (STANDBY MODE)	<60W @25°C
CONTROL & MONITORING	
DISPLAY	Optional EG4 FlexBOSS Screen Kit
USER INTERFACE	App/Web
REMOTE CONNECTIVITY	Wi-Fi, Cellular, and Ethernet (Wi-Fi dongle included by default)
ENVIRONMENTAL	
OPERATING TEMPERATURE RANGE	-13°F – 140°F (-25°C – 60°C) (>45°C derating)
STORAGE TEMPERATURE RANGE	-13°F – 140°F (-25°C – 60°C)
OPERATING HUMIDITY	0 – 95% relative humidity
OPERATING ALTITUDE	<6561 ft. (<2000 m)*
ENCLOSURE RATING	NEMA 4X
COOLING METHOD	Fans
NOISE	<50 dB @ 3 ft.
PHYSICAL SPECS	
DIMENSIONS (H × W × D)	30.43 × 22.28 × 11.22 in. (773 × 566 × 285 mm)
UNIT WEIGHT	115 lbs. (52 kg)
MOUNTING	Wall mount
MAX # OF INVERTERS IN PARALLEL	16
COMPLIANCE & SAFETY	
CERTIFICATIONS	UL1741, SA, SB; PCS CRD California Rule 21 Phase I, II, III; CSA 22.2.107.1:2016 Ed. 4; CSA 22.2.330:2017 Ed. 1; IEEE 1547.1:2020; IEEE 1547:2018 Hawaii Rule 14H [HECO SRD IEEE 1547.1-2020 Ed. 2]
EMISSIONS	FCC Part 15, Class B
WARRANTY	10 years**
SAFETY	Integrated DC disconnect, Reverse polarity protection, Output overvoltage protection varistor, Output over current protection, Ground fault monitoring, Grid monitoring, Pole sensitive leakage current monitoring unit, AFCI, RSD
PROTECTIONS	Arc-Fault Circuit Interrupter (AFCI) NEC 2020:690.11/UL1699B, Ground Fault Monitoring (GFDI) NEC 2020:690.41 (B), Rapid Shutdown (RSD) NEC 2020:690.12
BREAKER RATINGS	
BATTERY BREAKER	250A

**For installations above 2000 m, the inverter needs to be derated to specific values depending on the elevation. Refer to the "Inverter Altitude and Derating Usage Restrictions" guide by navigating to https://eg4electronics.com/wp-content/uploads/2026/04/EG4-Inverter-Altitude-Derating-Usage-Restrictions.pdf or by scanning the QR code below.*

***For information regarding warranty registration on EG4® Electronics products, please navigate to https://eg4electronics.com/warranty/ and select the corresponding product to begin the registration process.*

4. ABBREVIATIONS

- AWG – American Wire Gauge
- A – Amps
- Ah – Amp hour(s)
- AC – Alternating Current
- AFCI – Arc-Fault Circuit Interrupter
- AHJ – Authority Having Jurisdiction
- kAIC – kilo-Amp Interrupting Capability
- ANSI – American National Standards Institute
- BAT – Battery
- BMS – Battery Management System
- COM – Communication
- CT – Current Transformer
- DC – Direct Current
- DIP – Dual In-line Package
- DOD – Depth of Discharge
- EG – Equipment Ground
- EGS – Equipment Grounding System
- EMC – Electromagnetic Compatibility
- EPS – Emergency Power System
- ESS – Energy Storage System
- E-Stop – Emergency Stop
- FCC – Federal Communication Commission
- GE – Grounding Electrode
- GEC – Grounding Electrode Conductor
- GFCI – Ground Fault Circuit Interrupter
- GFDI – Ground Fault Detector/Interrupter
- Imp – Maximum Power Point Current
- IEEE – Institute of Electrical and Electronic Engineers
- IP – Ingress Protection
- Isc – Short-Circuit Current
- In-lbs. – Inch Pounds
- kW – Kilowatt
- kWh – Kilowatt-hour
- LCD – Liquid Crystal Display
- LFP – Lithium Iron Phosphate
- L1 – Line 1
- L2 – Line 2
- mm – Millimeters
- MPPT – Maximum Power Point Tracking
- mV – Millivolt
- N – Neutral
- NEC – National Electric Code
- NEMA – National Electrical Manufacturers Association
- NFPA – National Fire Prevention Association
- Nm – Newton Meters
- NOCT – Normal Operating Cell Temperature
- PC – Personal Computer
- PCB – Printed Circuit Board
- PE – Protective Earth
- PPE – Personal Protective Equipment
- PV – Photovoltaic
- RSD – Rapid Shut Down
- SCC – Standards Council of Canada
- SOC – State of Charge
- STC – Standard Testing Conditions
- UL – Underwriters Laboratories
- UPS – Uninterrupted Power Supply
- V – Volts
- VOC – Open-Circuit Voltage
- VMP – Voltage Maximum Power

5. SAFETY

5.1 SYMBOLS USED IN MANUAL

DANGER

This type of notation indicates a severe hazard that presents an immediate risk of serious injury or death.

WARNING

This type of notation indicates that a hazard may pose a risk to human health and safety.

TEAM LIFT

Use team lift whenever load weight, size, or center of gravity exceeds safe single-person handling limits. Coordinated lifting improves stability, control, and significantly reduces injury risk.

CAUTION

This type of notation indicates that the hazard could potentially damage the equipment.

NOTICE

This type of notation indicates that the information provided is important for the installation, operation, and/or maintenance of the equipment. Failure to follow the recommendations in such a notation could result in the equipment warranty being voided.

NOTE

This type of notation indicates useful information.

5.2 SYMBOLS USED ON EQUIPMENT

	WARNING: Read the instructions before installation, operation, and maintenance of the system.
	WARNING: Read the instructions before installation, operation, and maintenance of the system.
	WARNING: Hazardous Voltage Circuits!

5.3 SAFETY INSTRUCTIONS & NOTIFICATIONS

EG4® inverters, batteries, and system components are designed and tested in strict adherence to international safety standards. Before beginning any work, carefully review all safety instructions and follow them throughout the handling of all system components. Installation should be performed only by qualified service personnel who must adhere to the guidelines provided and follow appropriate practices in accordance with local electrical, building, fire, and utility regulations. It is also essential to consult the local Authority Having Jurisdiction (AHJ) to obtain any necessary permits and approvals prior to installation.

Incorrect installation may cause:

Injury or death to the installer, operator, or third party

Damage to the inverter or other attached equipment

WARNING

All tasks related to this product, including system design, installation, operation, setup, configuration, and maintenance, must be performed by trained personnel. To prevent electric shock, avoid performing any maintenance beyond what is outlined in the operating instructions unless qualified to do so.

DANGER

Hazardous Voltage Circuits! There are various safety concerns that must be carefully observed before, during, and after installation, as well as during future operation and maintenance. The following are important safety notifications for the installer and any end users of this product under normal operating conditions.

Save these instructions. This manual contains instructions for the FlexBOSS18 hybrid inverter which shall be followed during the installation and maintenance of the system.

1. **Beware of high PV voltage.** Install an external DC disconnect switch or breaker, making sure it is in the “off” or “open” position before installing or working on the inverter. Use a voltmeter to verify that no DC voltage is present to prevent electric shock.
2. **Beware of high grid voltage.** Confirm the AC switch and/or AC breaker are in the “off” or “open” position before installing or working on the inverter. Use a voltmeter to confirm that no voltage is present to prevent electric shock.
3. **Beware of high battery current.** Confirm the battery module breakers and/or on/off switches are in the “open” or “off” position before installing or working on the inverter. Use a voltmeter to confirm that no DC voltage is present to avoid electric shock.
4. **Do not open the inverter cable connection area while it is operating to avoid electric shock and damage from live voltage and current within the system.**
5. **Do not make any connections or disconnections (PV, battery, grid, communication, etc.) while the system is operating.** Damage to system components or risk of electric shock may occur if working with energized batteries.
6. **The system uses DC current.** DC current can lead to sustained muscle contractions, severe burns, or fire if mishandled during electric shock incidents.
7. **Do not disassemble the inverter or battery.** Contact the distributor for any issues requiring repair, for more information, and for proper handling instructions. Incorrect servicing or reassembly may pose a risk of electric shock or fire and void the warranty.
8. Confirm the PV, battery, and grid connections are secure and proper to prevent damage or injuries caused by improper installation.

9. Damage to the equipment or improper installation may cause arc flash, which can result in serious damage, injury, or death.
10. Make sure the inverter and battery are properly grounded.
11. Read all instructions before commencing installation. For electrical work, follow all local and national wiring standards, regulations, and these installation instructions. All wiring should comply with the National Electrical Code (NEC), ANSI/NFPA 70.
12. The inverter can connect to the utility grid only if the utility provider permits. Consult the local AHJ (Authority Having Jurisdiction) before installing this product to confirm any additional regulations or requirements for the immediate area.
13. All warning labels and nameplates on system components (inverters, batteries, etc.) must be clearly visible and must not be removed or covered.
14. The installer should consider the safety of future users when choosing the correct position and location of the inverter and battery, as specified in this manual.
15. Keep children from touching or misusing the inverter, battery, and relevant system components.
16. **Beware!** The inverter and other components of the system can get hot during use. Do not touch the inverter's surface or other components while the system is operating. During operation, only the LCD (if equipped) and buttons should be touched.
17. Rupture of the battery and shorting of battery cells can cause the release of toxic gases and harmful electrolyte solutions.
18. The installer must be adequately protected by wearing suitable, professional insulation gear, such as Personal Protective Equipment (PPE).
19. Some system components can be very heavy. Be sure to use team lift and other safe lifting techniques throughout the installation.
20. Before installing, operating, or maintaining any components in the system, it is important to inspect all existing wiring to ensure it meets the appropriate specifications and operating conditions.

WARNING

Cancer and reproductive harm – See www.p65warnings.ca.gov for more details.

DISCLAIMER

EG4 reserves the right to make changes to the material herein at any time without notice.
Please refer to www.eg4electronics.com for the most updated version of our manuals/spec sheets.

6. SÉCURITÉ

6.1 SYMBOLES UTILISÉS DANS LE MANUEL

DANGER

Ce type de signalisation indique un danger grave présentant un risque immédiat de blessures graves, voire mortelles.

AVERTISSEMENT

Ce type de signalisation indique qu'un danger peut présenter un risque pour la santé et la sécurité humaines.

LEVAGE EN ÉQUIPE

Utilisez le levage à deux personnes lorsque le poids, les dimensions ou le centre de gravité de la charge dépassent les limites de manutention sécuritaire pour une seule personne. Un levage coordonné améliore la stabilité et le contrôle, et réduit considérablement les risques de blessure.

REMARQUER

Ce type de notation indique que les informations fournies sont importantes pour l'installation, le fonctionnement et/ou l'entretien de l'équipement. Le non-respect des recommandations figurant dans cette notation pourrait entraîner l'annulation de la garantie de l'équipement.

RAPPEL

Ce type de notation indique des informations précédemment mentionnées qui doivent être prises en compte pour garantir un fonctionnement et une sécurité optimaux.

NOTE

Ce type de notation indique des informations utiles.

6.2 SYMBOLES UTILISÉS SUR L'ÉQUIPEMENT

	AVERTISSEMENT : Lisez les instructions avant l'installation, l'utilisation et l'entretien du système.
	AVERTISSEMENT : Lisez les instructions avant l'installation, l'utilisation et l'entretien du système.
	AVERTISSEMENT : Circuits à tension dangereuse.

6.3 CONSIGNES DE SÉCURITÉ ET AVIS

Les onduleurs, batteries et composants système EG4® sont conçus et testés en stricte conformité avec les normes de sécurité internationales. Avant toute intervention, veuillez lire attentivement toutes les consignes de sécurité et les respecter scrupuleusement lors de la manipulation du système. L'installation doit être effectuée uniquement par du personnel qualifié, qui doit respecter les directives fournies et appliquer les bonnes pratiques conformément aux réglementations locales en matière d'électricité, de construction, de sécurité incendie et de services publics. Il est également essentiel de consulter l'autorité compétente locale afin d'obtenir les permis et autorisations nécessaires avant l'installation.

Une installation incorrecte peut entraîner les effets suivants :

Blessure ou décès de l'installateur, de l'exploitant ou d'un tiers

Dommages à la batterie ou à tout autre équipement attaché

AVERTISSEMENT

Pour réduire le risque de blessure, lisez toutes les instructions ! Toutes les tâches relatives à ce produit, y compris la conception du système, l'installation, le fonctionnement, la configuration et la maintenance, doivent être effectuées par du personnel qualifié. Afin de prévenir tout risque d'électrocution, il est impératif de ne procéder à aucune opération de maintenance autre que celles décrites dans le manuel d'utilisation, sauf si vous possédez les qualifications requises.

DANGER

Circuits à haute tension! Il existe diverses précautions de sécurité qui doivent être scrupuleusement respectées avant, pendant et après l'installation, ainsi que lors de l'utilisation et de la maintenance futures. Vous trouverez ci-dessous des consignes de sécurité importantes destinées à l'installateur et à tout utilisateur final de ce produit dans des conditions normales d'utilisation.

Gardez ces instructions. Ce manuel contient des instructions importantes concernant l'onduleur hybride FlexBOSS18, qui doivent être suivies lors de l'installation et de la maintenance de l'onduleur.

1. **Méfiez-vous des tensions photovoltaïques élevées.** Installez un sectionneur ou un disjoncteur CC externe et assurez-vous qu'il est en position « off » ou « open » avant d'installer ou de travailler sur l'onduleur. Utilisez un voltmètre pour vérifier l'absence de tension CC afin d'éviter tout risque d'électrocution.
2. **Méfiez-vous des tensions élevées du réseau**. Assurez-vous que l'interrupteur CA et/ou le disjoncteur CA sont en position « off » ou « open » avant d'installer ou de travailler sur l'onduleur. Utilisez un voltmètre pour vérifier qu'il n'y a pas de tension afin d'éviter tout risque d'électrocution.
3. **Méfiez-vous du courant élevé de la batterie**. Assurez-vous que les disjoncteurs du module de batterie et/ou les interrupteurs marche/arrêt sont en position « ouverte » ou « arrêt » avant d'installer ou de travailler sur l'onduleur. Utilisez un voltmètre pour vérifier qu'il n'y a pas de tension continue afin d'éviter tout risque d'électrocution.
4. **N'ouvrez pas la zone de connexion des câbles de l'onduleur pendant son fonctionnement afin d'éviter tout risque d'électrocution et tout dommage causé par la tension et le courant présents dans le système.**
5. **N'effectuez aucune connexion ou déconnexion (PV, batterie, réseau, communication, etc.) pendant que le système est en fonctionnement.** Des dommages aux composants du système ou un risque de choc électrique peuvent survenir si vous travaillez avec des batteries sous tension.

6. Le système utilise du courant continu. Le courant continu peut entraîner des contractions musculaires prolongées, des brûlures graves ou un incendie s'il est mal manipulé lors d'incidents de choc électrique.
7. Ne démontez pas l'onduleur ou la batterie. Contactez le distributeur pour tout problème nécessitant une réparation, pour plus d'informations et pour obtenir des instructions de manipulation appropriées. Un entretien ou un remontage incorrect peut présenter un risque d'électrocution ou d'incendie et annuler la garantie.
8. Assurez-vous que les connexions PV, batterie et réseau sont sécurisées et correctes afin d'éviter tout dommage ou blessure causé par une installation incorrecte.
9. Tout dommage causé à l'ESS ou toute installation incorrecte peut provoquer un arc électrique, pouvant entraîner des dommages graves, des blessures ou la mort.
10. Assurez-vous que l'onduleur et la batterie sont correctement mis à la terre.
11. Lisez toutes les instructions avant de commencer l'installation. Pour les travaux électriques, respectez toutes les normes et réglementations locales et nationales en matière de câblage, ainsi que les présentes instructions d'installation. Tout le câblage doit être conforme au Code national de l'électricité (NEC), ANSI/NFPA 70.
12. L'onduleur et le système ne peuvent être interconnectés avec le réseau électrique public que si le fournisseur d'électricité l'autorise. Consultez l'autorité compétente locale avant d'installer ce produit afin de confirmer toute réglementation ou exigence supplémentaire applicable à la zone immédiate.
13. Toutes les étiquettes d'avertissement et plaques signalétiques apposées sur les composants du système (onduleurs, batteries, etc.) doivent être clairement visibles et ne doivent pas être retirées ou recouvertes.
14. L'installateur doit tenir compte de la sécurité des futurs utilisateurs lorsqu'il choisit la position et l'emplacement corrects de l'onduleur et de la batterie, comme indiqué dans ce manuel.
15. Empêchez les enfants de toucher ou d'utiliser de manière abusive l'onduleur, la batterie et les composants du système concernés.
16. **Attention !** L'onduleur et certaines parties du système peuvent devenir chauds pendant leur utilisation. Ne touchez pas la surface de l'onduleur ni la plupart de ses composants lorsque le système est en marche. Pendant le fonctionnement, seuls l'écran LCD (si présent) et les boutons doivent être touchés.
17. La rupture de la batterie et le court-circuit des cellules de la batterie peuvent entraîner le dégagement de gaz toxiques et de solutions électrolytiques nocives.
18. L'installateur doit s'assurer qu'il est correctement protégé en portant un équipement d'isolation professionnel adapté, tel qu'un équipement de protection individuelle (EPI).
19. Certains composants du système peuvent être très lourds. Veillez à utiliser des techniques de levage en équipe et d'autres techniques de levage sécuritaires tout au long de l'installation.
20. Avant d'installer, d'utiliser ou d'entretenir tout composant du système, il est important d'inspecter tout le câblage existant afin de s'assurer qu'il répond aux spécifications et aux conditions de fonctionnement appropriées.

AVERTISSEMENT

Cancer et dommages reproductifs – Voir www.P654warnings.ca.gov pour plus de détails.

DISCLAIMER

EG4® se réserve le droit de modifier le contenu de ce document à tout moment sans préavis. Veuillez consulter www.eg4electronics.com pour la version la plus récente de nos manuels/fiches techniques.

TAKE THESE ADDITIONAL PRECAUTIONS DURING INSTALLATION/REPLACEMENT

Ensure that all precautions listed above have been taken prior to beginning the installation and observe these additional precautions during installation. Failure to take these precautions may result in serious injury or death:

- ***Thermal Runaway:*** ***Immediately stop the installation, place battery in a safe state if possible, and move away from the battery if the battery:***
    - ***begins to swell or bulge,***
    - ***if you smell any unusual odors,***
    - ***if you hear a hissing sound, or***
    - ***if the battery begins to emit heat and/or smoke.***

  Your battery may be experiencing thermal runaway, a dangerous condition that may cause fire or explosion. Contact local fire department, Chemtrec 800-262-8200, and EG4 support.

- ***Electrical Shock: When installing/replacing the battery:***
    - ***Ensure that the battery does not get wet.***
    - ***Do not spray water or other liquids on the battery.***
    - ***Do not perform the installation in conditions where dust, moisture, or other debris could enter the battery.***
    - ***Avoid touching connections and components unless instructed to do so by this guide.***
    - ***Do not leave the battery unattended during the installation without it being in a safe state. Do not touch, lean on, or lay tools on the battery or connections.***

  If you are electrically shocked during installation, place battery in a safe state if possible, and seek immediate medical attention.

- ***Ventilation Warning: When installing/replacing the battery:***
    - ***Do not open the battery.***
    - ***Do not attempt the installation/replacement if the battery is damaged.***

Lithium batteries may emit toxic gases when ruptured. Do not attempt to repair the battery in the case of rupture. Move outdoors in the case of rupture and seek professional assistance.

- ***<u>Electrolyte Exposure</u>: When installing/replacing the battery:***
  - ***Ensure that the battery is not damaged.***
  - ***Do not attempt the installation/replacement if the battery is damaged.***

Lithium batteries contain a liquid electrolyte solution that is corrosive and damaging to skin and eyes. Exposure may occur in the case of damage to the battery. In the case of contact with skin or eyes, wash continuously with water for 15 minutes and seek immediate medical attention. Remove contaminated clothes immediately. In the case of ingestion, drink at least two glasses of water or milk, induce vomiting if unconscious, and seek immediate medical attention.

General Advice:

In all cases of exposure, seek medical attention if symptoms persist or if large amounts of electrolyte are involved. Show this safety information to the treating physician.

Skin Contact:
- **Immediately remove contaminated clothing and shoes.**
- **Rinse affected skin thoroughly with plenty of water for at least 15 minutes.**
- **Seek medical attention if irritation persists or burns appear.**
- **Wash contaminated clothing before reusing.**

Eye Contact:
- **Immediately flush eyes with plenty of water for at least 15 minutes, keeping eyelids open.**
- **Remove contact lenses if present and easy to do.**
- **Seek immediate medical attention.**

Inhalation (if applicable):
- **Move the person to fresh air immediately.**
- **If breathing is difficult, provide oxygen. If not breathing, give artificial respiration.**
- **Seek immediate medical attention.**

Ingestion:
- **Do not induce vomiting.**
- **Rinse mouth with water.**
- **Give small amounts of water or milk to dilute, if the person is conscious and alert.**
- **Never give anything by mouth to an unconscious person.**
- **Seek immediate medical attention or contact Poison Control immediately.**

PRENEZ CES PRÉCAUTIONS SUPPLÉMENTAIRES LORS DE L'INSTALLATION OU DU REMPLACEMENT

Assurez-vous que toutes les précautions énumérées ci-dessus ont été prises avant de commencer l'installation et respectez ces précautions supplémentaires pendant l'installation. Le non-respect de ces précautions peut entraîner des blessures graves ou la mort.

- ***Emballement thermique:*** ***Arrêtez immédiatement l'installation, mettez la batterie dans un état sécuritaire si possible et éloignez-vous de la batterie si celle-ci :***
  - ***commence à gonfler ou à se déformer,***
  - ***dégage des odeurs inhabituelles,***
  - ***émet un sifflement, ou***
  - ***commence à dégager de la chaleur et/ou de la fumée.***

La batterie peut être en situation d'emballement thermique, une condition dangereuse pouvant entraîner un incendie ou une explosion. Communiquez avec le service d'incendie local, Chemtrec au 800-262-8200, et le soutien EG4.

- ***Choc électrique: Lors de l'installation ou du remplacement de la batterie :***
  - ***Assurez-vous que la batterie ne soit pas mouillée.***
  - ***Ne vaporisez pas d'eau ni d'autres liquides sur la batterie.***
  - ***N'effectuez pas l'installation dans des conditions où de la poussière, de l'humidité ou d'autres débris pourraient pénétrer dans la batterie.***
  - ***Évitez de toucher les connexions et les composants sauf indication contraire dans ce guide.***
  - ***Ne laissez pas la batterie sans surveillance pendant l'installation si elle n'est pas dans un état sécuritaire***
  - ***Ne touchez pas la batterie, ne vous appuyez pas dessus et ne déposez pas d'outils sur la batterie ou les connexions.***

En cas de choc électrique pendant l'installation, mettez la batterie dans un état sécuritaire si possible et consultez immédiatement un professionnel de la santé.

- ***Avertissement – Ventilation: Lors de l'installation ou du remplacement de la batterie :***
  - ***N'ouvrez pas la batterie.***
  - ***N'effectuez pas l'installation ou le remplacement si la batterie est endommagée.***

Les batteries au lithium peuvent émettre des gaz toxiques en cas de rupture. N'essayez pas de réparer la batterie si elle est rompue. En cas de rupture, déplacez-vous à l'extérieur et demandez l'assistance d'un professionnel qualifié.

- ***Exposition à l'électrolyte : Lors de l'installation ou du remplacement de la batterie :***
  - ***Assurez-vous que la batterie n'est pas endommagée.***
  - ***N'effectuez pas l'installation ou le remplacement si la batterie est endommagée.***

Les batteries au lithium contiennent une solution d'électrolyte liquide corrosive et nocive pour la peau et les yeux. Une exposition peut survenir si la batterie est endommagée. En cas de contact avec la peau ou les yeux, rincez abondamment à l'eau pendant 15 minutes et consultez immédiatement un professionnel de la santé. Retirez immédiatement les vêtements contaminés. En cas d'ingestion, buvez au moins deux verres d'eau ou de lait, provoquez le vomissement si la personne est consciente, et consultez immédiatement un professionnel de la santé.

Conseils généraux :

Dans tous les cas d'exposition, consultez un médecin si les symptômes persistent ou si de grandes quantités d'électrolytes sont impliquées. Montrez ces informations de sécurité au médecin traitant.

Contact avec la peau :
- **Retirez immédiatement les vêtements et chaussures contaminés.**
- **Rincez abondamment la peau affectée à l'eau pendant au moins 15 minutes.**
- **Consultez un médecin si l'irritation persiste ou si des brûlures apparaissent.**
- **Laver les vêtements contaminés avant de les réutiliser.**

Contact avec les yeux :
- **Rincer immédiatement les yeux à grande eau pendant au moins 15 minutes, gardant les paupières ouvertes.**
- **Retirer les lentilles de contact si présentes et si cela est facile à faire.**
- **Consulter immédiatement un médecin.**

Inhalation (le cas échéant) :
- **Transporter immédiatement la personne à l'air frais.**
- **Si la respiration est difficile, administrer de l'oxygène. Si la personne ne respire pas, pratiquer la respiration artificielle.**
- **Consulter immédiatement un médecin**

Ingestion :
- **Ne pas faire vomir.**
- **Rincer la bouche à l'eau.**
- **Donner de petites quantités d'eau ou de lait pour diluer, si la personne est consciente et alerte.**
- **Ne jamais rien donner par voie orale à une personne inconsciente.**
- **Consultez immédiatement un médecin ou contactez immédiatement le centre antipoison.**

7. PRODUCT OVERVIEW

The EG4® FlexBOSS18 is a 120/240VAC split-phase, all-in-one, hybrid, sine wave inverter designed for the residential and small commercial markets. The FlexBOSS18 can utilize 18kW of DC (STC) solar PV on 2 MPPTs 26/26A and can utilize 10kW of power directly for loads from battery and 13kW with solar PV gain when connected to the grid. It can bypass 90A of utility power from its grid port to its load port. The FlexBOSS18 is a more affordable entry level cousin to the FlexBOSS21. Though it can perform as a standalone inverter, it has been designed to work optimally with EG4's GridBOSS power gateway. This unique pairing unlocks an even more robust feature-set and level of performance for the end user.

7.1 PACKING LIST

When the product is unpacked, the contents should match the list below:

Images for reference only.

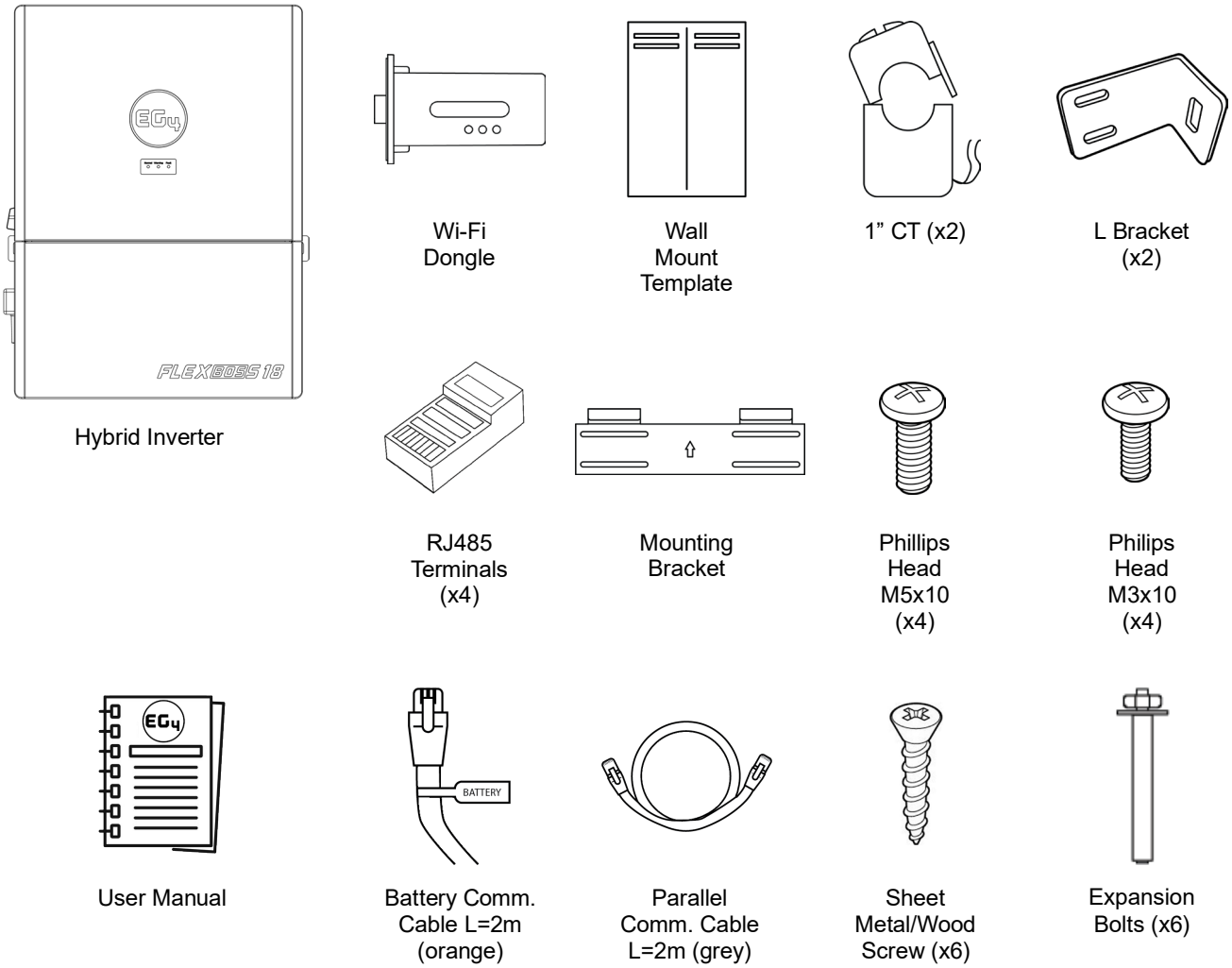

Figure 7.1 – Inverter Packing List

7.2 FEATURES

- FlexBOSS18 is a split-phase hybrid inverter that is able to operate on and off the grid.
- Designed for rural and suburban homeowners, and small commercial companies seeking energy savings and independence.
- Charge batteries and power loads simultaneously as users harness multiple power sources, including photovoltaic (PV), battery storage, as well as the grid.
- Supports up to 18kW of DC (STC) solar PV input while producing 13kW of continuous AC output at 240V when utilizing PV, even during battery charging, positioning it as an effective option for those looking to implement a robust Energy Storage System (ESS).
- Rated for 10kW continuous output without PV, and 13kW continuous output when utilizing PV and grid connection, with a power factor of 1.
- Incorporates MPPTs, a bi-directional DC-AC inverter, grid interaction, and battery connectivity. Supports closed-loop communications with all EG4® batteries and a wide selection of third-party batteries using CAN/RS485 protocols.
- Two MPPT solar charge controllers support a PV input of up to 600V with a nominal operating range of 250VDC – 440VDC. The two MPPTs allow for flexibility in paralleling strings at up to 26A each, for a total of 18kW of utilized solar power.
- Features a comprehensive list of certifications that ensure code compliance while offering additional safety and reliability. Fully compliant safety features include PV Arc Fault Protection, PV Ground Fault Protection, PV Reverse Polarity Protection, Pole Sensitive Leakage Current Monitoring Unit, Surge Protection, Integrated PV Disconnect, built-in RSD transmitter, and RSD/ESS disconnect initiator.
- Modular design allows for expansion, adapting to growing energy needs and securing future efficiency in solar investment. Supports up to 10 inverters in a parallel configuration.
- Users can monitor system performance and perform updates remotely via the EG4 Monitoring website and mobile app, ensuring control and flexibility.
- Full AC coupling, generator, and smart loads capabilities when used with GridBOSS.

7.3 OPERATION OVERVIEW

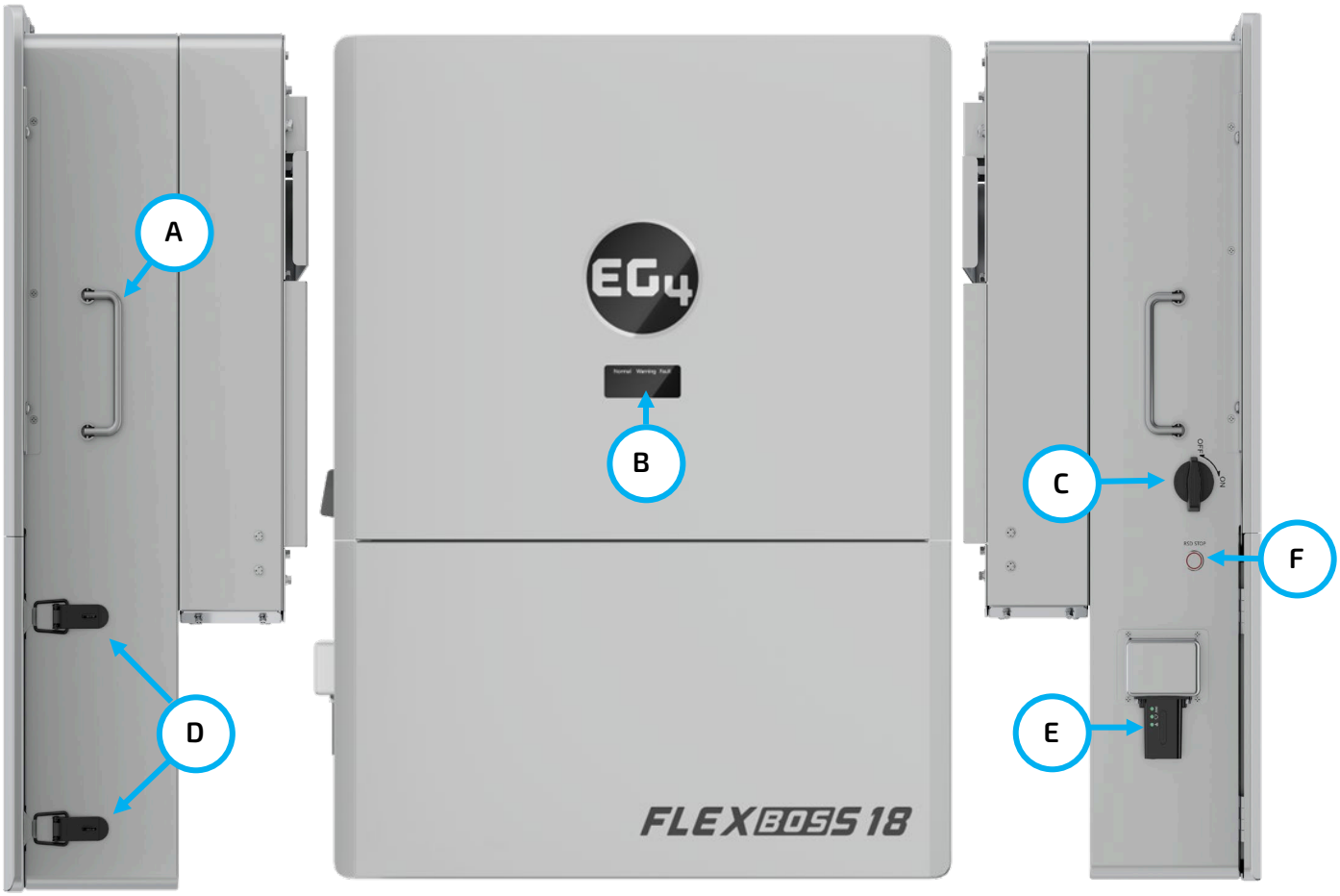

Figure 7.2 – Inverter Overview

Table 7.1 – Inverter Overview

CALLOUT	COMPONENT	DESCRIPTION
A	Handles	Use for installation.
B	LED Panel	Used to monitor system status.
C	PV Disconnect Switch	Used to connect and disconnect power from solar panels.
D	Clasps	Use to open cable box.
E	Wi-Fi Dongle	Used to communicate with Monitor Center app or website.
F	RSD Button	Rapid Shut Down.

CABLE BOX OVERVIEW

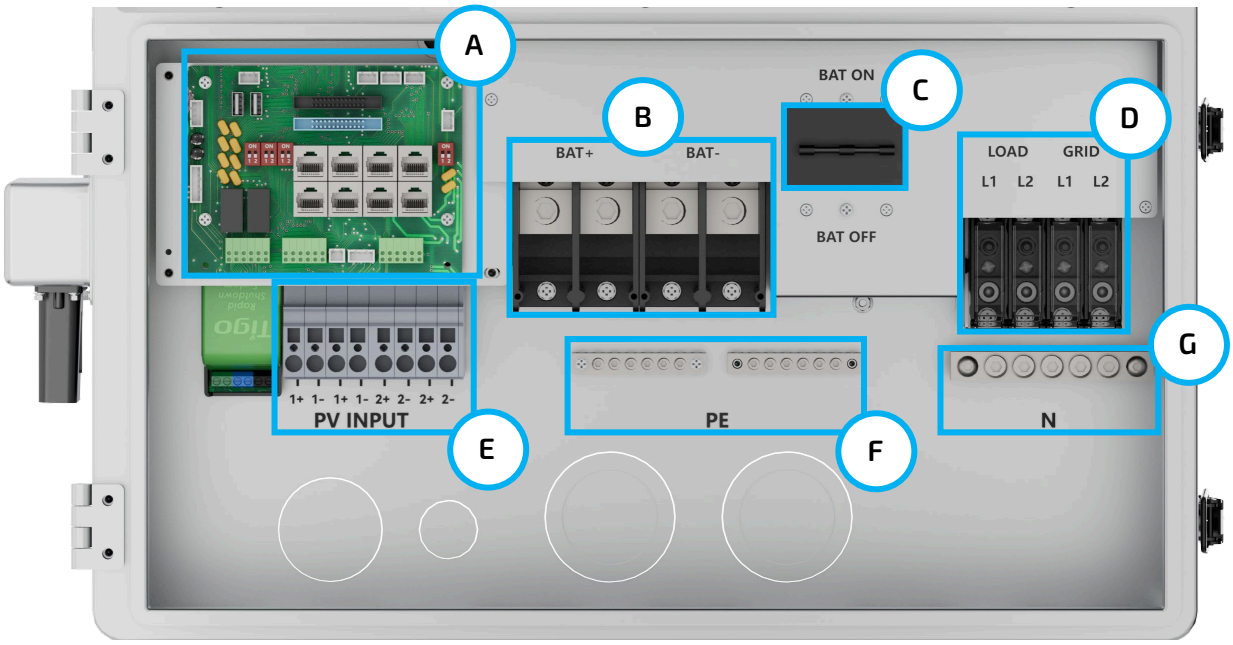

Figure 7.3 – Inverter Cable Box Overview

Table 7.2 – Inverter Cable Box Overview

CALLOUT	COMPONENT	DESCRIPTION
A	Communication Board	Provides support and connections for inverter paralleling, CTs, battery communications, and external RSD.
B	Battery (DC) Connections	Used to connect battery cables.
C	Integrated Bonded Battery Breaker	Overcurrent protection for connected batteries.
D	AC Connections	Used for wiring AC power from the grid and to the loads.
E	PV Input	Used for wiring DC power from solar units to the inverter.
F	Protected Earth (Ground Busbar)	Used for ground wiring.
G	Neutral Busbar	Used for neutral wiring.

COMMUNICATION BOARD OVERVIEW

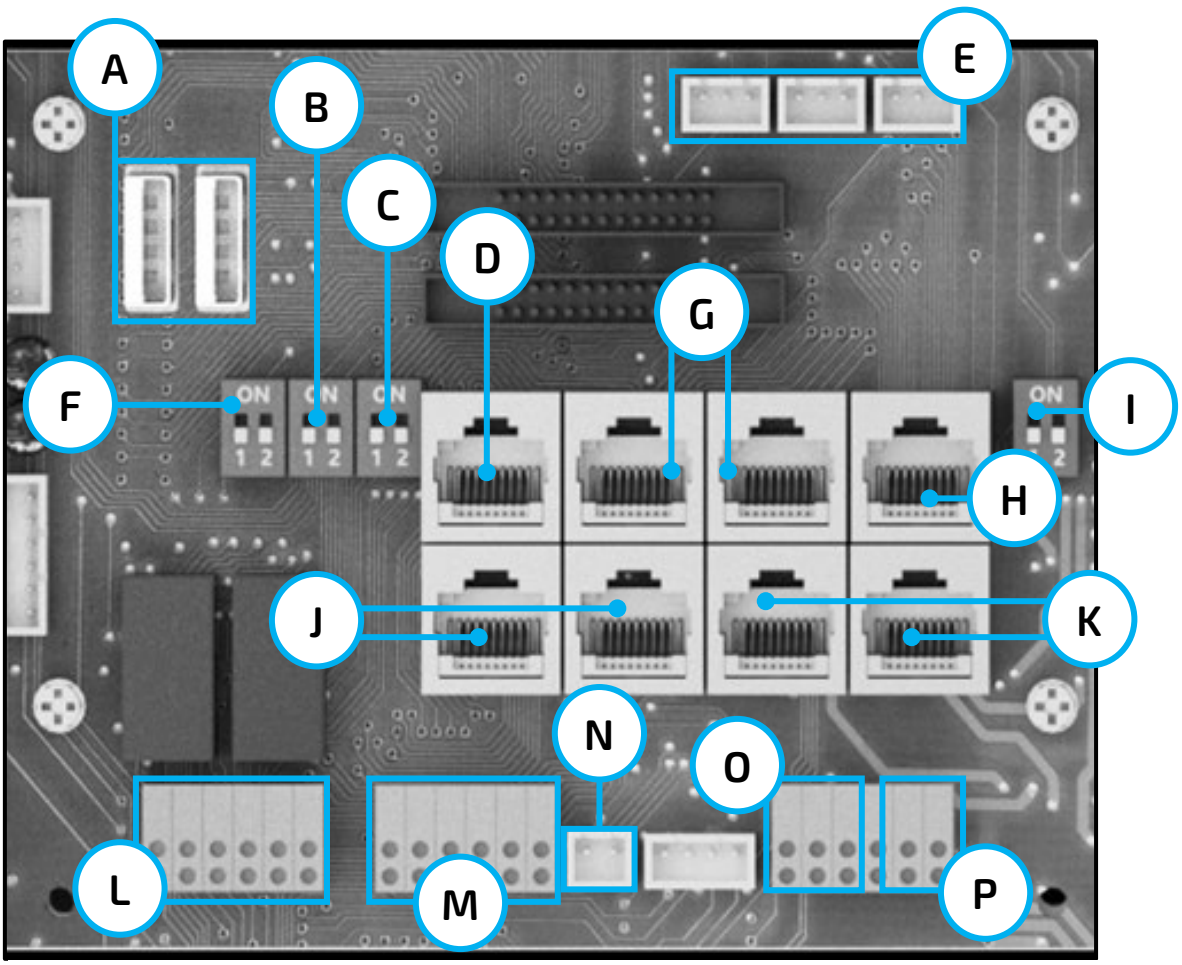

Figure 7.4 – Inverter Communication Board

Table 7.3 – Inverter Communication Board

CALLOUT	DESCRIPTION
A	Reserved
B	Reserved
C	Parallel DIP Switches: Set DIP switches when using inverter in parallel.
D	Battery Communication Port (CAN & RS485)
E	Fan Power Supply
F	Reserved
G	Reserved
H	CT Interface Ports
I	Reserved
J	Reserved
K	Paralleling Communication Ports
L	DRY (NO, NC) Reserved
M	RSD Terminals
N	NTC: Connection for temperature sensor for lead acid battery.
O	Meter 485B & 485A. For meter communication.
P	DC power for customer use, max 1A.

7.4 DIMENSIONS

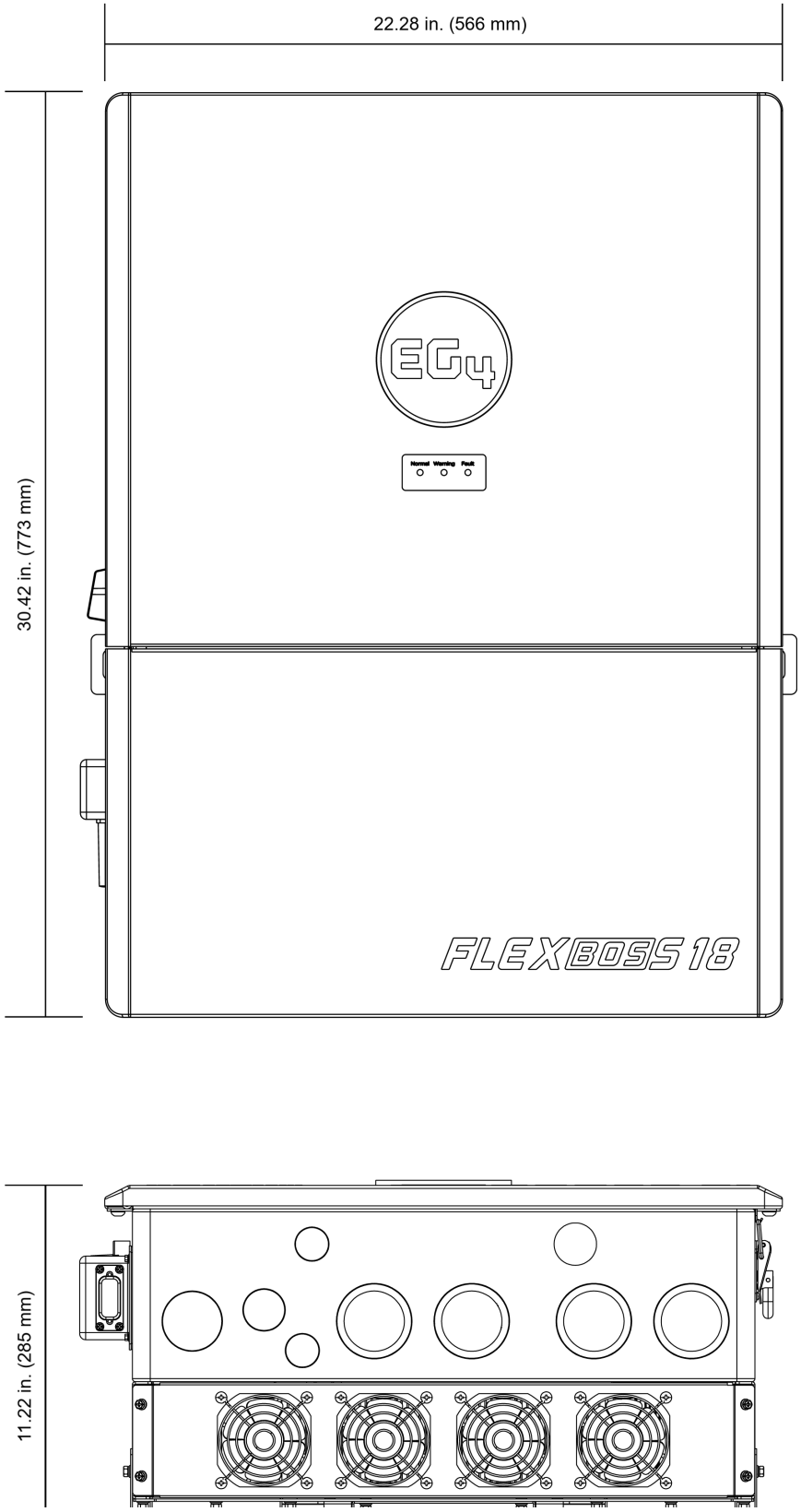

Figure 7.5 – Inverter Dimensions

BOTTOM VIEW OF CABLE BOX KNOCKOUTS

Table 7.4 – Inverter Knockouts

U.S. NOM. TRADE SIZE	ACTUAL KNOCKOUT SIZE
3/4 in.	28.5 mm. (1.12 in.)
1 1/2 in.	50.5 mm. (1.99 in.)
2 in.	63 mm. (2.48 in.)

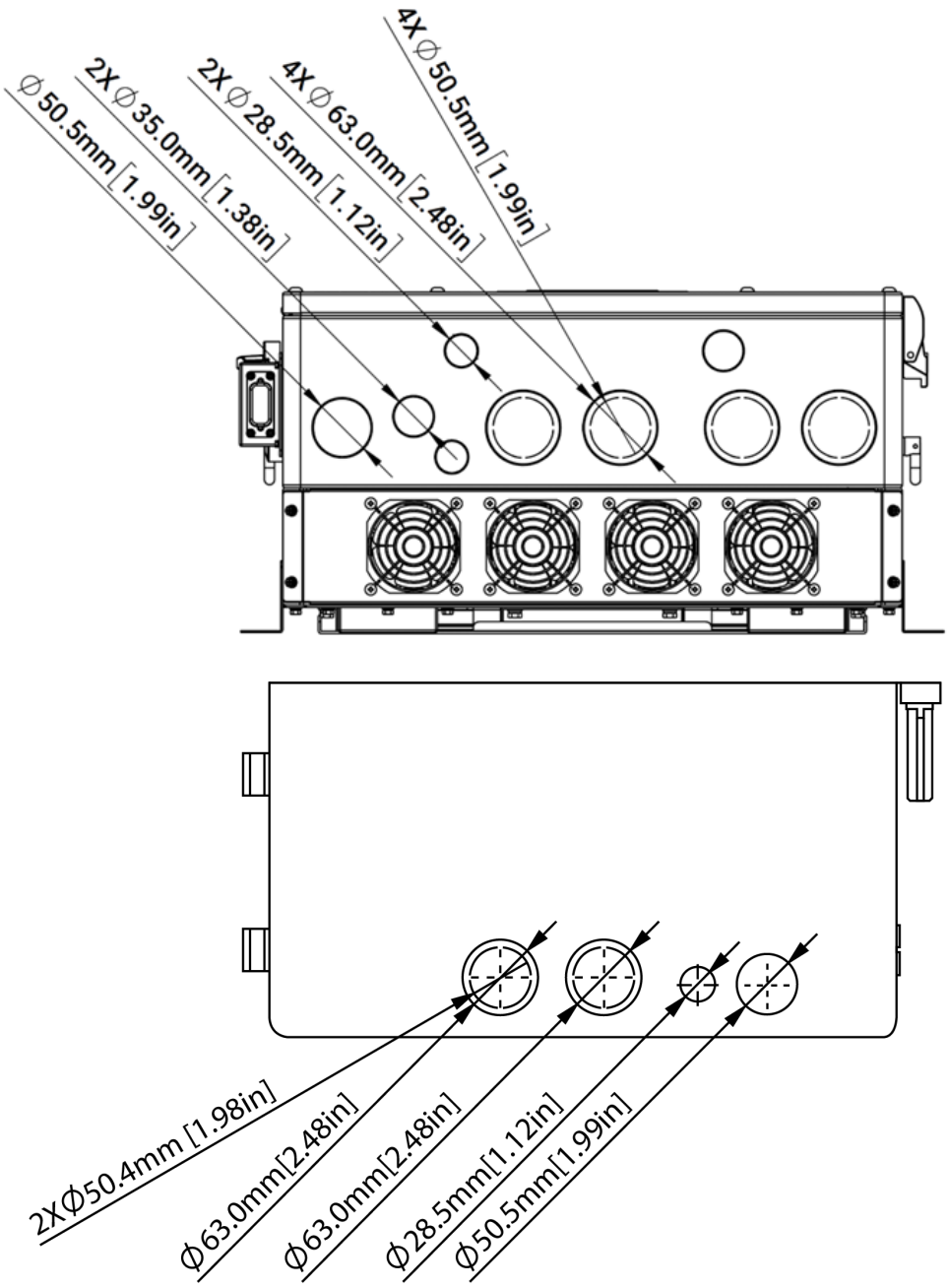

Figure 7.6 – Inverter Knockouts

BACK VIEW OF CABLE BOX KNOCKOUTS

7.5 STORING THE INVERTER

If placing the inverter into storage before installation, keep the following factors in mind while selecting a storage location:

CAUTION

- The inverter and its components must be stored in its original packaging.
- The storage temperature should be within -13 – 140°F (-25 – 60°C) with humidity between 0 – 85%.
- The packing should remain upright with a maximum of 6 layers.
- Do not directly expose the inverter or its packaging to sunlight or rain and keep away from corrosive materials.

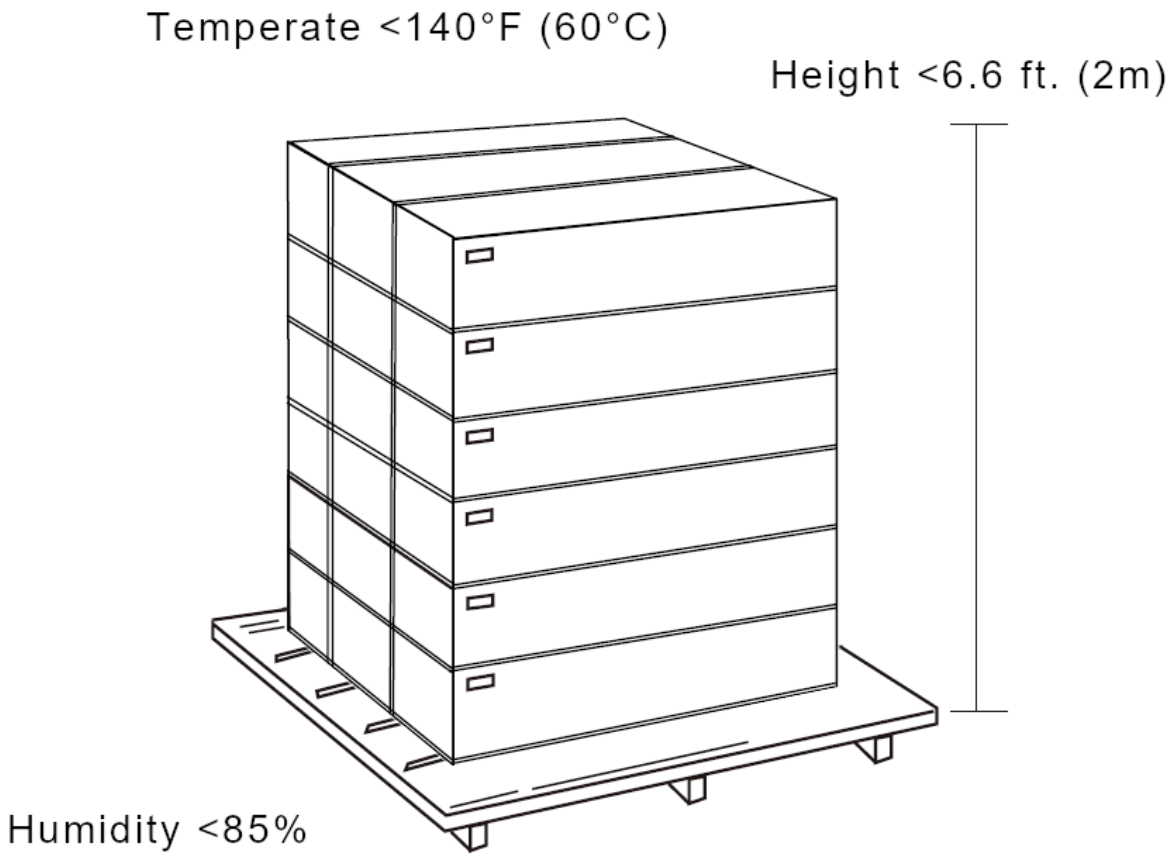

Figure 7.7 – Storage Information

8. GENERAL INSTALLATION

This section provides detailed steps for installing and configuring the inverter. It is recommended to complete each section in order as listed below.

INSTALLATION STEPS

6.1 Recommended Tools
6.2 Location Requirements
6.3 Mounting the Inverter
6.4 Cable Installation
6.5 Initial Startup and Configuration

8.1 RECOMMENDED TOOLS

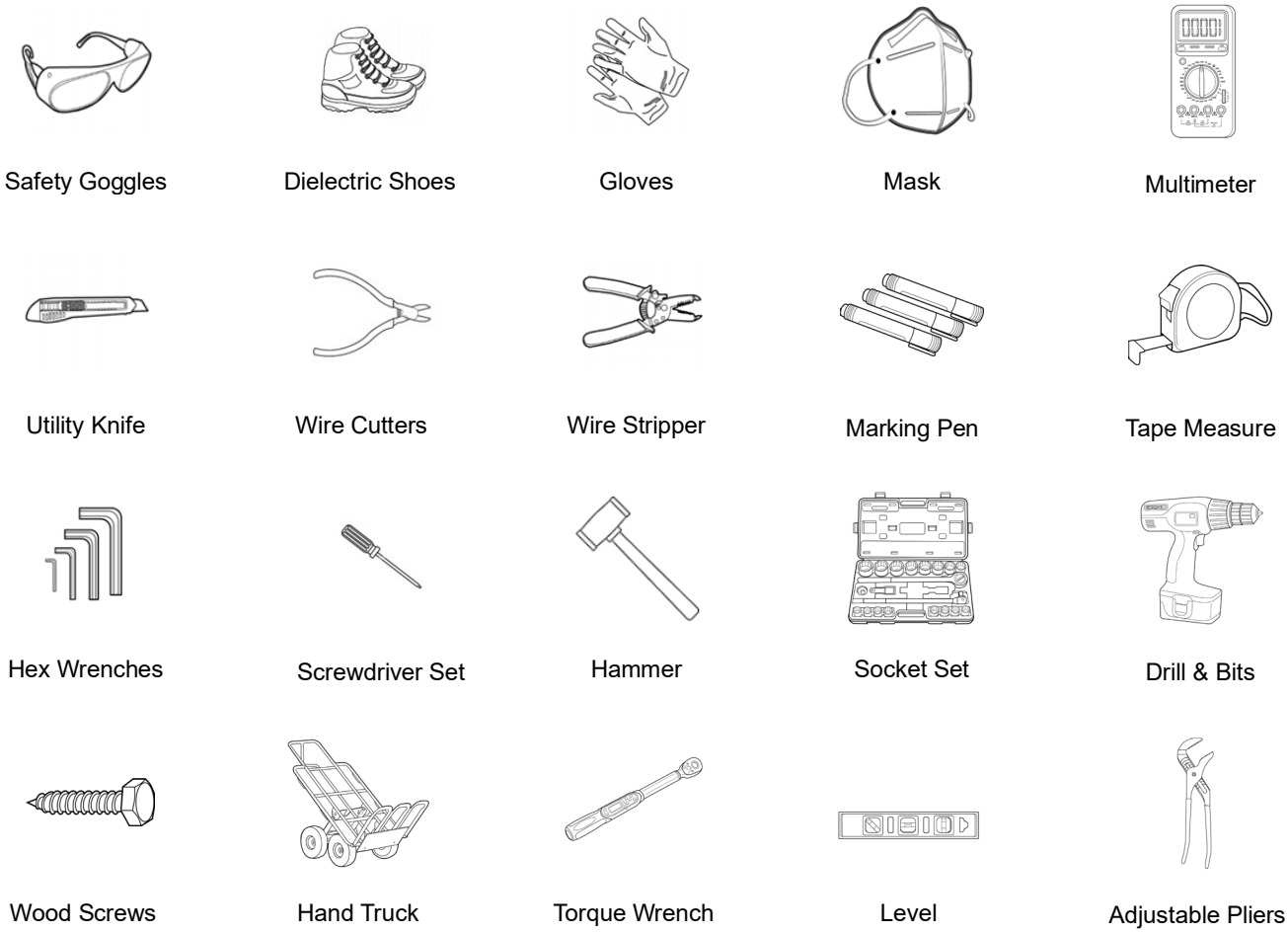

Figure 8.1 – Recommended Tools & PPE

8.2 LOCATION REQUIREMENTS

- The mounting wall should be strong enough to bear the weight (115 lbs. (52 kg)) of the inverter.

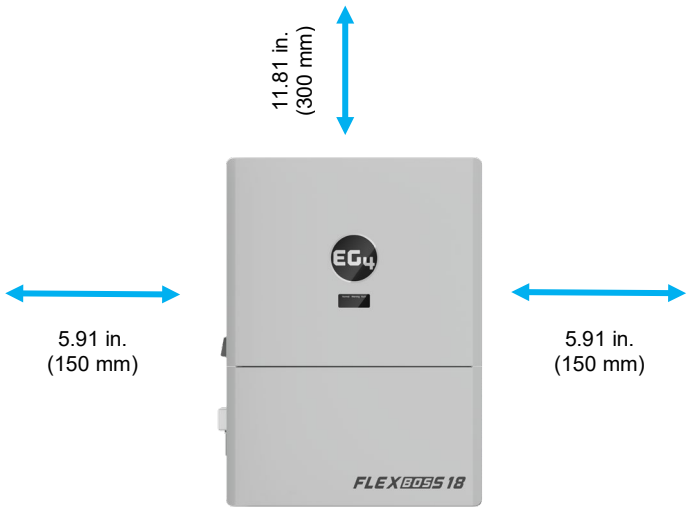

Figure 8.2 – Install Spacing

- Maintain the minimum clearances presented above for adequate heat dissipation.
- Avoid placing the inverter in direct sunlight, rain, or snow. Refer to the figure below and choose a well-covered site or in an indoor location to protect the inverter from the elements.
- The inverter should be installed upright on a vertical surface.

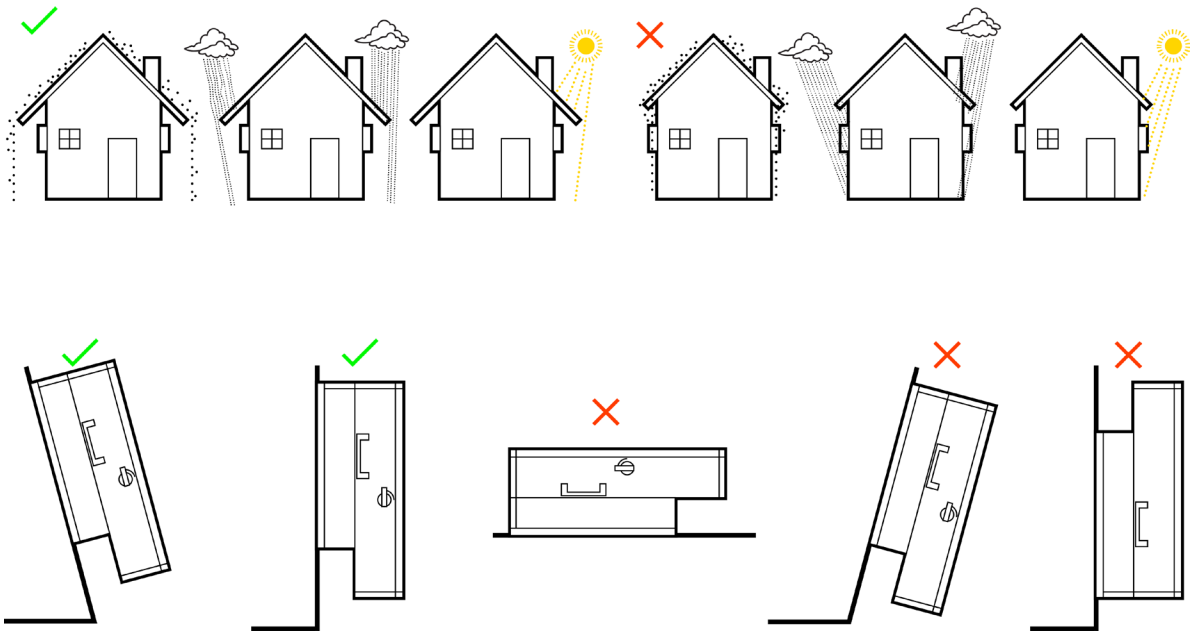

Figure 8.3 – Environmental and Mounting Requirements

CAUTION

Ensure there is at least 5.91 inches (150 mm) of space around the sides and 11.81 inches (300 mm) around the top of the inverter for heat to dissipate as designed. Ensure the inverter is mounted away from all combustible materials or else there is a risk of fire.

8.3 MOUNTING THE INVERTER

The inverter is designed to be wall-mounted on a solid, vertical, non-combustible surface such as brick or concrete. Two or more people may be needed to install the inverter due to its weight, using the team-lift technique. The slots on the mounting bracket can accommodate various stud spacings from 12 in. (305 mm) to 16 in. (406 mm).

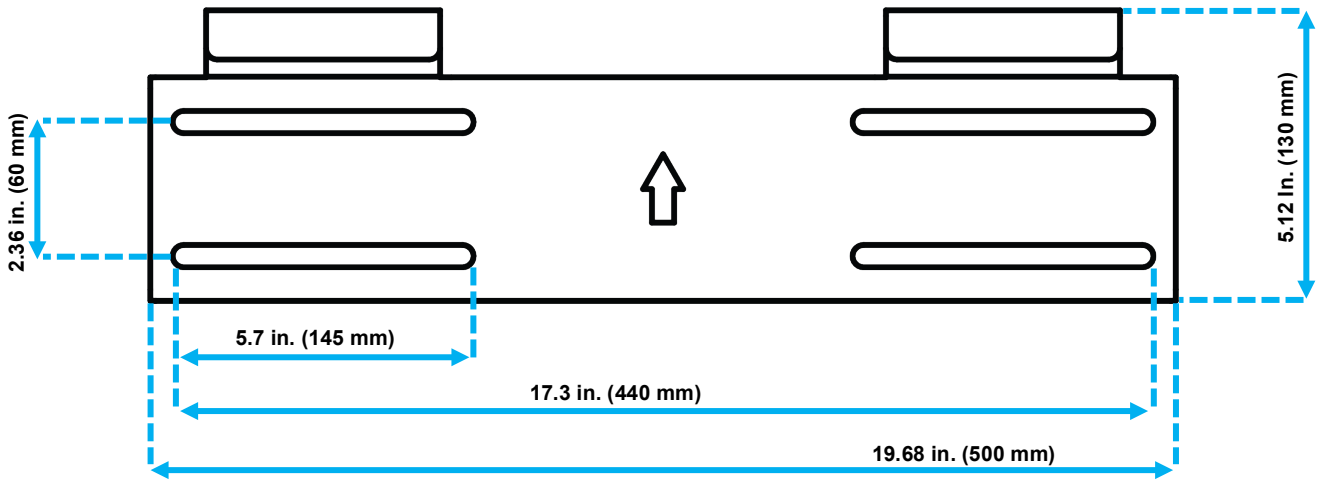

Figure 8.4 – Mounting Bracket Slots Spacing

NOTE

Ensure the mounting surface can support the weight of the inverter and maintains the proper spacing as shown in the images in section 6.2.

MOUNTING STEPS

1. Select a location for the inverter's final placement as described in section 6.2.

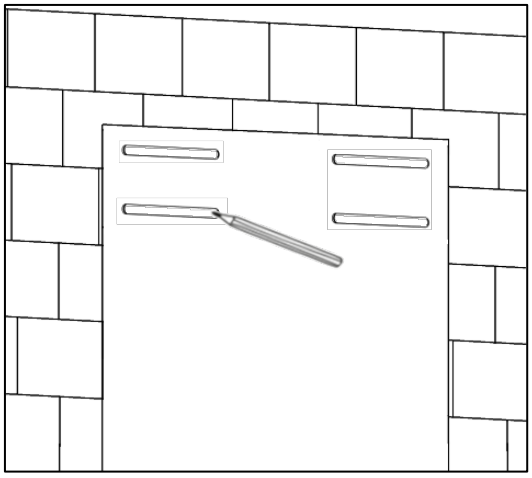

2. Use the wall mounting template and a marker to mark where the mounting bracket screws will be installed. Use a level to ensure the bracket will be installed parallel with the ground.

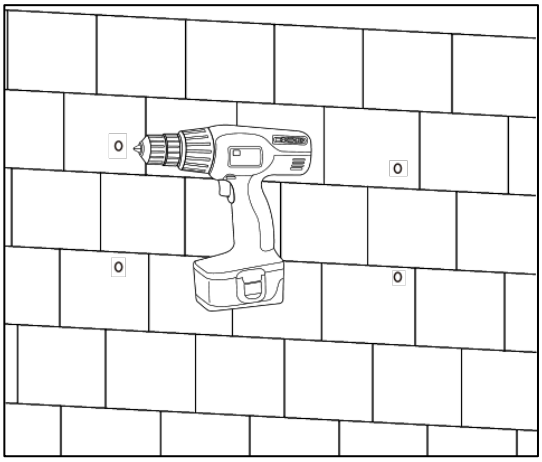

3. When installing the bracket to concrete or brick, drill 5/16 in (8 mm) diameter holes on the marks, making sure the holes are deeper than 2 in. (50 mm) when using the included expansion bolts. When installing the bracket to studs, verify the marked holes are over a stud to ensure the weight of the inverter is supported and drill a pilot hole sized appropriately for the screw diameter used. Ensure studs are spaced 12 – 16 in. (305 – 406 mm).

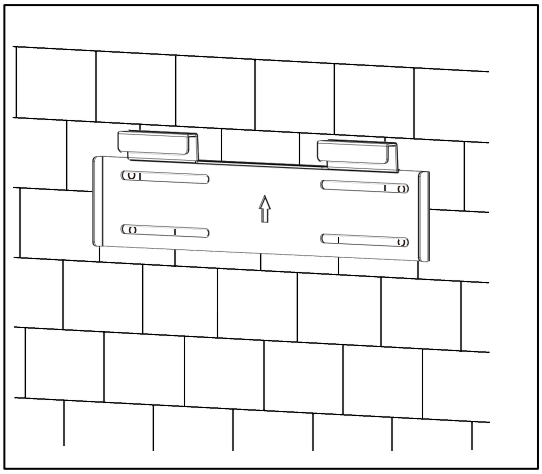

4. For concrete or brick installation, insert the expansion bolts into the drilled holes. Install the bracket to the wall, ensuring the arrow is pointing up. Use the corresponding nuts and washers (packaged together with the expansion bolts) to affix the bracket to the wall. For stud wall installation, use the proper screws and affix the bracket to the wall.

Figure 8.5 – Mounting Steps 1, 2, 3 & 4

5. Using the team-lift technique, place the inverter onto the wall bracket, securing it to the wall.

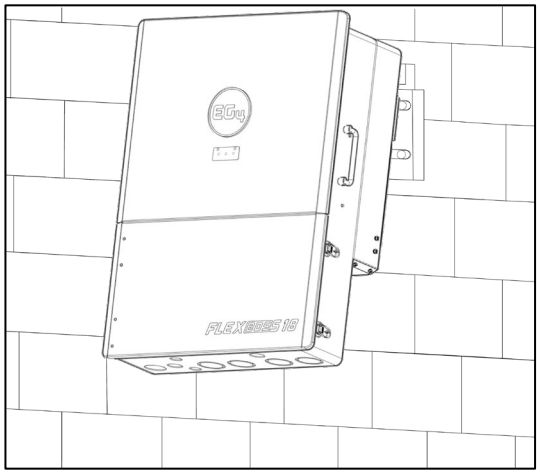

6. Temporarily mount the L bracket to the side of the inverter (located at the bottom, one on each side). Mark holes on the wall based on the hole location on the L bracket (repeat this step for both sides).

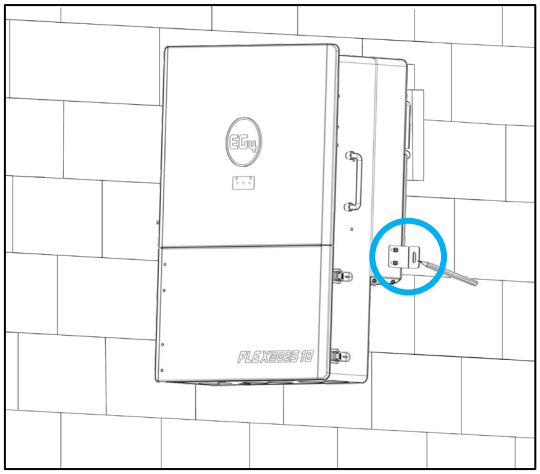

7. Remove the L bracket and drill a hole at the marking. Use the drill bit size based on the anchor type or screw size as directed in step 3 (repeat this step for both sides).

8. Attach the L brackets (one on each side) to the inverter and to the wall using the correct hardware. Once the bracket is secure, the wall installation is complete.

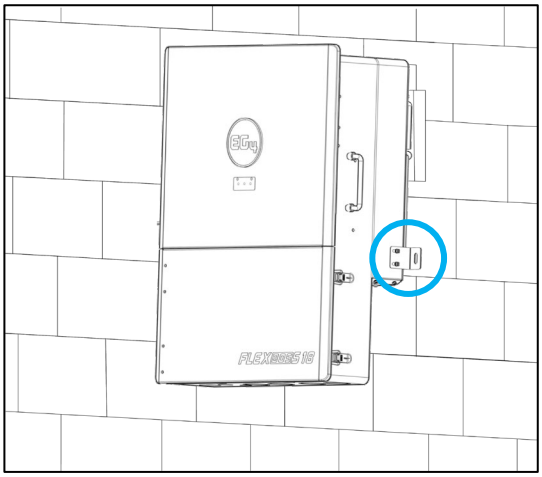

Figure 8.6 – Mounting Steps 5, 6, 7 & 8

8.4 CABLE INSTALLATION

To expose the cable box area, open the bottom cover by releasing the clasps on the side of the inverter and removing the three screws on the internal wire box cover as indicated in the image below. Before connecting any wiring to the inverter, verify each wire is not carrying voltage using a multimeter.

Figure 8.7 – Connection Overview

BATTERY CONNECTIONS

The EG4® FlexBOSS18 comes equipped with two battery inputs with two positive and two negative points of connection. The two positive battery terminals are protected by a 250A breaker. This is to accommodate using parallel conductors as supplied with the WallMount battery series. It is designed to utilize four battery cables by using two sets of cables rather than resorting to larger cable sizes. For safe operation and regulation compliance, install a separate DC over-current protector or disconnect device between battery and inverter.

Cable Requirements*:

Table 8.1 – Mid-Doc Table Caption 7 Column

# OF CABLES PER POLE	TOTAL # OF CABLES	CABLE SIZE	TOTAL CABLE SET AMPACITY	MAX DISTANCE	TORQUE VALUES	INTEGRATED BATTERY BREAKER
2	4	1/0 AWG (53.5mm^2)	340A	16 ft.	Max. 230 in-lbs. (26Nm)	250A
2	4	2/0 AWG (67.4mm^2)	390A	21 ft.	Max. 230 in-lbs. (26Nm)	250A
2	4	3/0 AWG (85.0mm^2)	450A	26 ft.	Max. 230 in-lbs. (26Nm)	250A
2	4	4/0 AWG (107mm^2)	520A	33 ft.	Max. 230 in-lbs. (26Nm)	250A

**If longer cables are needed than what is shown in the chart, contact the distributor, consult a licensed electrician or see the National Electric Code (NEC) for additional information.*

NOTE

The inverter needs a minimum of 300Ah of battery capacity to support the output specifications!

INSTALL STEPS:

1. Place all breakers in the OFF position before connecting or disconnecting any wires. Ensure that there is no voltage present with a multimeter.
2. Strip 3/5 in. – 4/5 in. (15 mm – 20 mm) of insulation from the cable end.
3. Route the battery power cable, connecting positive (red) to BAT+, and negative (black) to BAT-.
4. Fasten positive and negative battery cables to the mechanical terminals according to the markings with an M8 hex wrench. See torque values in the table above.
5. Verify the positive and negative battery cables are properly connected to the battery bank and the total amp hours meet or exceed the recommended 300Ah.

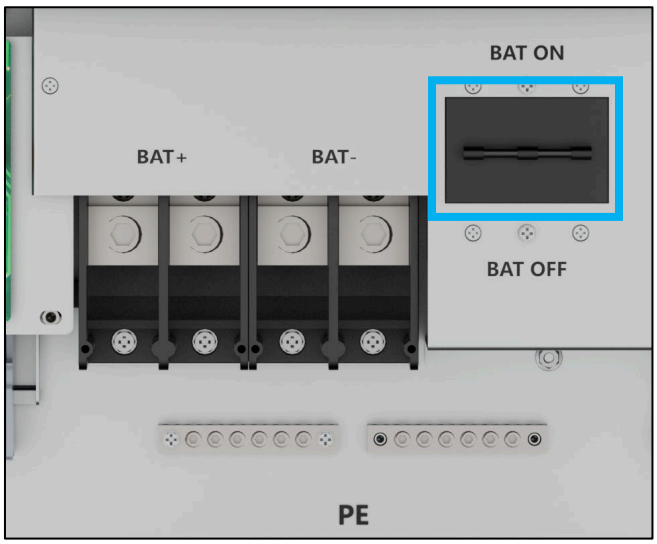

Figure 8.8 – Cable Installation

NOTE

For best practice when installing multiple inverters in parallel, the battery bank must be connected to each inverter so the current can be evenly shared between each inverter. The positive cable from the battery bank to each inverter should be of equal length. If a busbar is used between the battery bank and the inverter, the cable from the busbar to each inverter should be equal lengths. Each negative cable should be of equal length as well. Using equal length positive cables and equal length negative cables supports equal amperage to each inverter. The positive cables and negative cables do not need to be the same length, only match cable length of the same polarity.

BATTERY COMMUNICATION CABLE CONNECTIONS:

- The communications cable is used with supported LiFePo4 batteries only. Closed loop battery communication is not supported for some 3rd party batteries nor with lead acid batteries.
- Use the included orange battery communication cable to connect the battery to the inverter. Put the inverter in standby mode to protect batteries until values are set.
- The battery communication port on the inverter is an RJ45 socket with the pinout for the RJ45 plug shown on the next page.
- The inverter supports both CAN and RS485 communication.
- After connecting the battery power and communication cables, go to the Monitor Center app or website. Select “Maintenance,” “Remote Set,” and choose the correct battery type under “Common Settings.”
- For closed-loop communication between the inverter and lithium batteries, choose “Lithium” as the battery type. For inter-battery communication and battery setup with EG4® batteries, refer to the respective battery manual.
- Select the “Lead-Acid” setting if the battery cannot communicate with the inverter. Ensure battery settings are within the battery’s specifications to prevent damaging the battery bank.

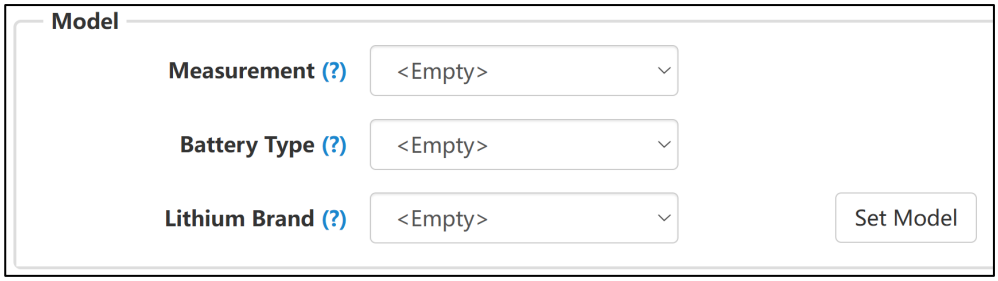

Figure 8.9 – Battery Communication Cable Connections

NOTE

If using EG4® LifePower4 V1 batteries in the system, a firmware update may be required for closed-loop communications. Navigate to *https://www.eg4electronics.com/* for the most recent updates and documentation or contact the distributor for this file. For communication with EG4 batteries, select “Lithium” under “Battery Type” and then select “1” under “Lithium brand”.

- If using LifePower4 V1 batteries or RS485 communications, use “0:EG4” under “Lithium brand”.

FOR LITHIUM BATTERIES:

- EG4® strongly recommends using closed-loop communications between the battery bank and inverter. Ensure the lithium battery being used is compatible with the inverter by visiting www.eg4electronics.com for an updated list of third-party batteries capable of closed-loop communication.
- If using multiple batteries modules with the inverter, the inverter communication cable must be connected to the master battery and the master inverter. Check the battery documentation for master and slave settings/definitions.

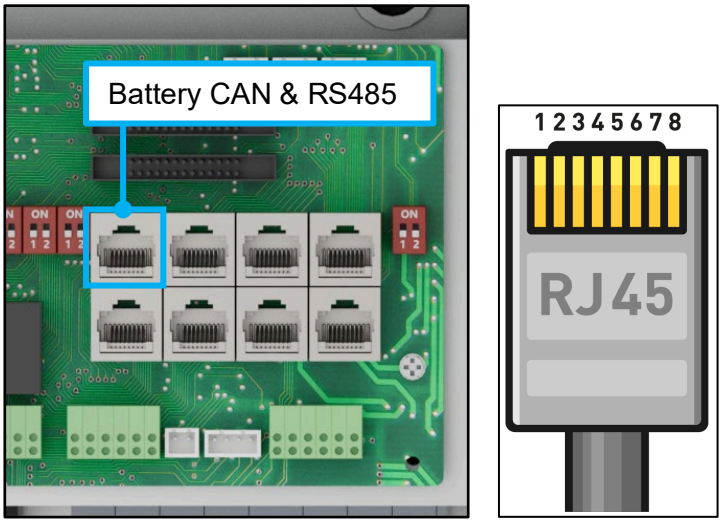

Figure 8.10 – Lithium Battery Connections

Table 8.2 – Lithium Battery PIN

PIN	DESCRIPTION
1	BAT RS485B
2	BAT RS485A
3	NC
4	BAT CAN H
5	BAT CAN L
6	NC
7	NC
8	NC

FOR LEAD-ACID BATTERIES:

Closed-loop communication is not available with lead-acid batteries; however, a third-party external temperature sensor will enable the inverter to control the charge/discharge of the battery. Follow the battery's documentation to determine setting parameters and for additional information.

PV CONNECTIONS

When sizing PV wires, adhere to the following information*:

Table 8.3 – Cable Size

CABLE SIZE	MIN. INSULATOR VOLTAGE	MAX. AMPERAGE PER MPPT
10 AWG – 6 AWG (max.) ($6\ mm^2$ – $16\ mm^2$)	600V	MPPT 1: 26A
		MPPT 2: 26A

**Consult a licensed electrician or National Electric Code (NEC) to ensure that appropriate cable size is used due to various factors such as distance, operating voltage, and amperage.*

NOTICE

- Verify the lowest ambient temperature of the installation location. The rated VOC on the solar module nameplate is obtained at STC (77°F/25°C). As the ambient temperature drops, the solar module VOC increases. Ensure the maximum solar string voltage, corrected at the lowest temperature, does not exceed the inverter's maximum input voltage of 600V.
- It is recommended to install a PV disconnect switch between the inverter and PV modules.
- It is very important for system safety and efficient operation to use proper cable for PV module connection as shown in the table above.
- When connecting multiple inverters in parallel, a single string cannot be shared between inverters. Each string must be connected to its own MPPT.

Table 8.4 – PV Connections

PV INPUT DATA	DESCRIPTION	PARAMETER
PV Input Voltage Range	Range required for the unit to operate.	100 – 600 VDC
Unit Start-Up Voltage	Voltage required for the unit to power on	100 VDC
Load Output Minimum Voltage	Minimum voltage required to output power to loads	>140 VDC
MPPT Operating Voltage Range	Range where MPPT can track	120 – 440 VDC
Full Power MPPT Voltage Range	Range where the MPPT operates at max. capacity	250 – 440 VDC
Nominal MPPT Voltage	Voltage at which the MPPT operates most optimally	360 VDC
Max. Utilized Solar Power	Wattage the unit can utilize from the solar array	18kW
Recommended Max. Solar Input	Suggested PV power input to the device to utilize full 18kW of PV	21kW

INSTALL STEPS:

1. Ensure all breakers and disconnect switches are in the OFF position before connecting or disconnecting any wires. Use a multimeter to confirm there is no voltage present.
2. Strip off 1/2 in. – 2/3 in. (13 mm – 17 mm) insulation on the PV strings' positive and negative conductors.
3. Insert the conduit fitting into the opening for the PV connection and tighten it from the inside using the counter nut.
4. Route the PV conductors through the conduit fitting and into the inverter.

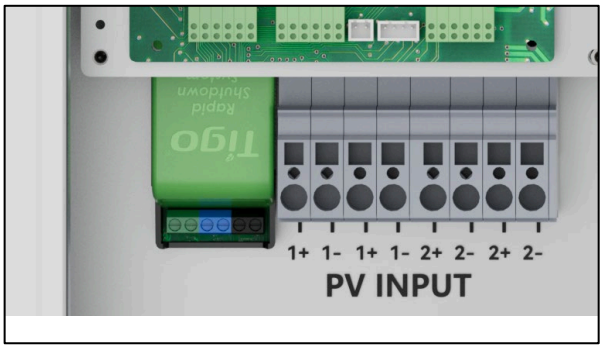

Figure 8.11 – PV Wiring

5. Secure the PV conductors in place into the inverter inputs by inserting a flathead screwdriver into the square and the conductor into the circular input. Verify that they are secured properly by lightly pulling on them.
6. Ensure the conduit and conduit fittings are fastened securely and the cable entry holes are sealed.

NOTE

Use wire ferrules for the PV string conductors if using fine stranded wire.
Navigate to the *EG4® Solar Panel String Sizer* tool for additional assistance:
https://eg4electronics.com/wp-content/themes/hello-elementor/eg4-solar-panel-string-sizer.

STRING USAGE & SIZING

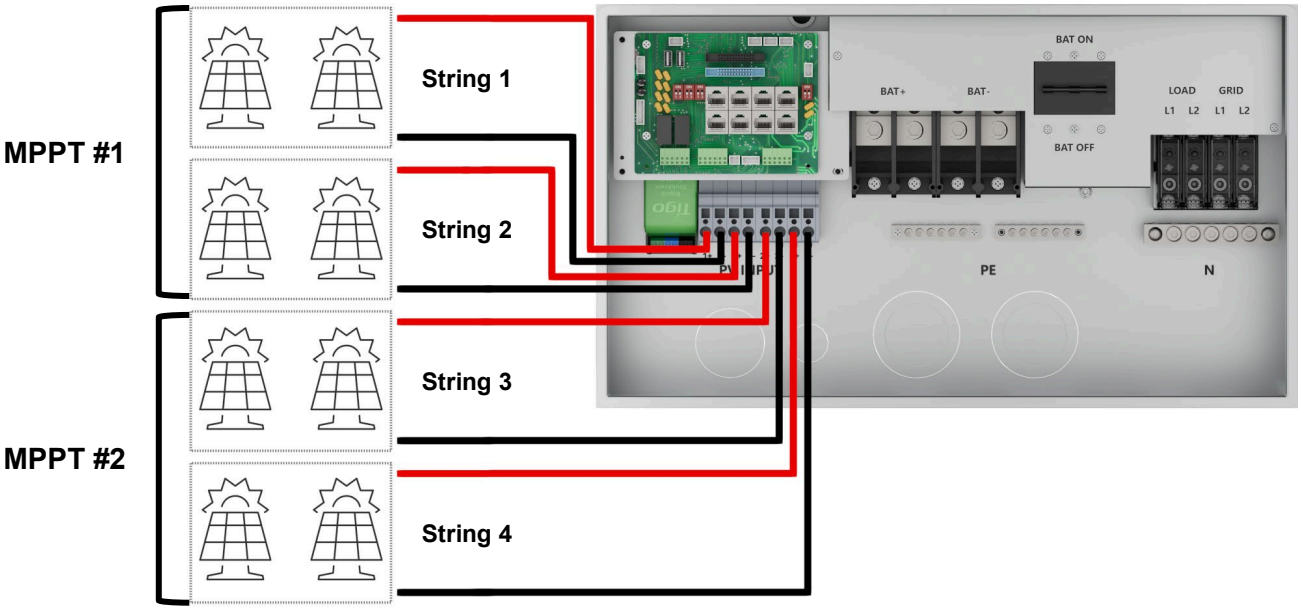

Figure 8.12 – String Sizing

The image shown above represents full utilization of the 2 MPPTs. It is for representative purposes only.

- The maximum utilized solar input of the inverter is 18kW (DC).
- Each MPPT can utilize up to 26A of solar input each, with a maximum input of 31A. Exceeding 31A can damage the equipment.
- When both strings of the same MPPT are used, the inverter will parallel the two stings together. Each of the single strings cannot exceed 13A. This is to ensure the total amperage of the paralleled strings does not exceed 26A (Imp).
- Verify each string does not exceed the inverter's MPPT circuit ratings. Double check if the calculated VMP range is within the 120 – 440VDC MPPT circuit operating range. Consult a solar designer if needed.
- All panels on a string should face the same orientation and be exposed to roughly the same shading across the string. Consideration should be placed on string location and wiring order on the racking to minimize shading effects. One shaded module can disproportionately reduce output for the entire string. Optimizers can help counteract the effects of partial shading.
- When using both strings within an MPPT, both strings will ideally contain the same model, brand, and quantity of panels to make sure the two strings don't reduce the performance of one another.
- When solar modules are put in a series, the voltage multiplies by the number of modules and the amperage stays the same as each module.
- When equal solar strings are put in parallel, the amperage multiplies by the number of strings.
- If an external Overcurrent Protection Device (OCP) is needed, use OCP rated for 600 VDC at an amperage equal to the fuse rating of the panel. Please see solar module specifications for more information.

AC CONNECTIONS

When sizing AC wires, adhere to the following information*:

Table 8.5 – AC Connections

CONNECTION	MAX. BREAKER SIZE	MAX. CABLE SIZE	MAX TORQUE VALUES
Grid	90A	2 AWG (50 mm^2)	93 in-lbs. (10.5 Nm)
Load	90A	2 AWG (50 mm^2)	93 in-lbs. (10.5 Nm)
Ground	-	4 AWG (25 mm^2)	26 in-lbs. (2.9 Nm)
Neutral	-	2/0 AWG (70 mm^2)	44 in-lbs. (5 Nm)

**Consult installer to ensure that appropriate cable size is used due to various factors such as distance, operating voltage, and amperage.*

NOTE

- Always be sure to connect the AC Output ground wire to the Ground terminal before installing the AC Output L1 and L2.
- If using fine stranded wire, use ferrules to secure the connections.
- When installing multiple inverters in parallel, it is recommended to use equal length AC cables from each inverter to the main panel and from each inverter to the loads panel.
- If used in conjunction with GridBOSS, the Load port is not used. See the GridBOSS user manual for more information.

GROUND NEUTRAL BONDING

The information below describes the nature of the ground and neutral in the inverter and their relationship to the system. Always consult with a licensed electrician to ensure that the right configuration is being used:

- The neutral of the AC input and the AC output are common (known as a Common Neutral Architecture).
- The neutral line between the AC input and AC output is never disconnected.
- The inverter never creates a neutral-ground bond in any mode of operation.

CAUTION

The system must have only one ground-neutral bond (typically the Main Bonding Jumper located at the service entrance main breaker).

INSTALL STEPS:

The FlexBOSS18 comes equipped with L1 and L2 terminals for AC input (labeled GRID) and output (labeled LOAD). It is designed to utilize up to 90A of input and up to 90A of output (via bypass). These terminals are not connected to a breaker; it is recommended to install a separate AC breaker between inverter and AC input power source. This will ensure the inverter can be disconnected during maintenance and fully protected from over current AC input. Consult a licensed electrician or check with the local AHJ for exact requirements for means of disconnect.

1. Before connecting or disconnecting AC wires, ensure all breakers are in the OFF position. Check that there is no voltage present with a voltmeter.
2. Strip off 2/5 in. – 3/5 in. (10 – 15 mm) insulation from the AC cables.

NOTE

Use wire ferrules if the cables are made of fine stranded wires.

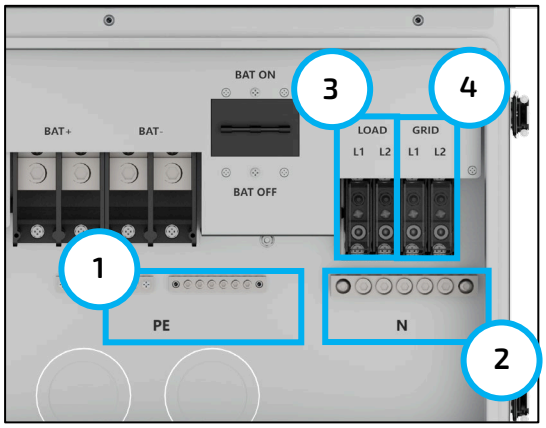

Figure 8.13 – Steps for AC Connection

3. Connect the AC ground wire to the ground bus (Callout 1).
4. Fasten the neutral wire into the neutral bus (Callout 2).
5. Secure the AC wires into their respective mechanical lugs (Callouts 3 and 4). Connect line 1 to L1, and line 2 to L2. Torque to the specifications in the chart above
6. Check that the cables are connected properly. Take appropriate measures to ensure the conduit and conduit fittings are properly secured and seal the cable entry holes.

CAUTION

- Do not misconnect the grid input and loads output connections. This may cause damage to the inverter and other attached devices.
- Be sure to connect the AC wires with the correct polarity. If the L and N wires are reversed, it will cause the inverters to go into fault and may damage the inverter when the inverters are working in parallel operations.

CT CONNECTION

To measure the power imported from and exported to the grid, a pair of CTs or one three-phase meter must be installed at the service entry point in or near the main service panel. Two (2) CTs are provided with each inverter with a 300A rating.

WARNING

Do not install the CTs when using this inverter with EG4® GridBOSS. If installed, the inverters current output can show false readings in EG4 Monitor Center.

CT Type:

Model: CTSA024-300A/100mA **Technical Specification:** 240V/208V, 300A/100mA

CT PORT PIN DEFINITION:

The CT interface for the two (2) CT connections is an RJ45 port. The two (2) CTs come with a premade plug that can be connected directly to the RJ45 port.

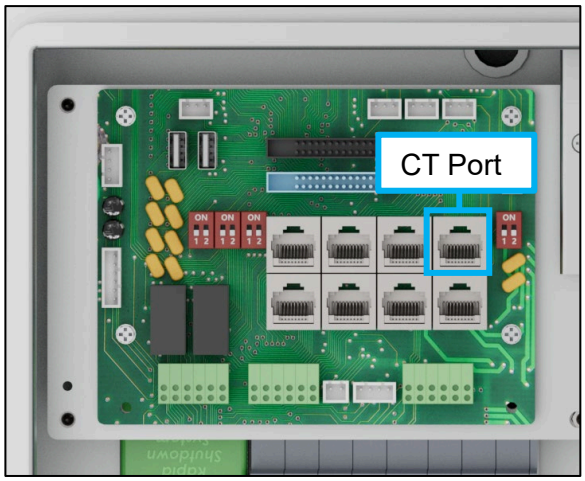

Table 8.6 – CT Port

PIN	DESCRIPTION
1 – 4	Reserved
5	CT2N
6	CT2P
7	CT1N
8	CT1P

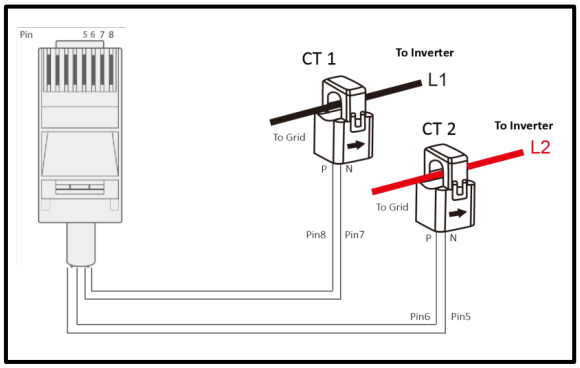

Figure 8.14 – CT Port

Refer to the connection diagram below for the correct position of the CTs. Clamp the 2 CTs onto the L1 and L2 wires at the service entry point in the main service panel as close to the meter base as possible.

The arrows on the CTs must point toward the inverter and should be placed on the proper line based on their number. (CT 1 for L1, CT 2 for L2)

CT CLAMP RATIO:

The inverter supports three ratios of CT clamps: 1000:1, 2000:1, and 3000:1. The included CTs are 3000:1.

If using a 3rd party CT, ensure the CT ratio is of the supported types. Be sure to select the correct CT ratio setting on the inverter.

Black – L1
Red – L2
Grey – Neutral
Blue – Communication Cable

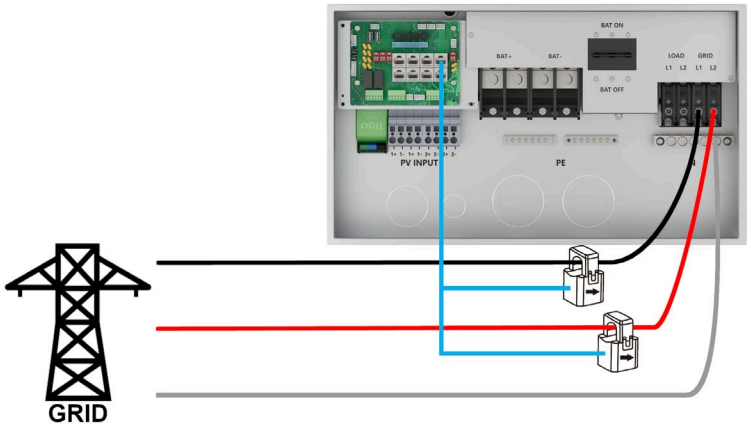

Figure 8.15 – CT Orientation

EXTENDING THE CT CLAMP CABLE:

The CT wires can be extended with a standard CAT5 (or up) ethernet cable if they are not long enough. An RJ45 adapter is needed for the extension. The CT wires can be extended up to 300 ft. (around 90 m).

Figure 8.16 – Connection

8.5 INITIAL STARTUP & CONFIGURATION

This section describes powering on a single or multiple inverters for the first time, including the related configurable settings via the mobile app or website. These settings can be configured only after a user account is created. Follow the steps in section 7.2 to create a new user account and then section 8 for using Monitor Center.

WARNING

If more than one inverter is installed and interconnected as one Energy Storage System (ESS), follow the steps listed under “Multiple Inverters” on the following page. Each inverter must be properly configured to work together in parallel mode before outputting current onto the Load ports. If the proper configuration is not followed, damage could be caused to the inverter and other connected devices.

SINGLE INVERTER

1. Ensure each inverter circuit breaker is in the open (OFF) position. No voltage should be coming in or out of the inverter.
2. Using a multimeter, check the following:
    a. Check the battery bank voltage is within operating range at the inverter DC breaker, or the external DC disconnect.
    b. Check the PV voltage is within operating range at input connections of the inverter.

c. If using AC input, double check each hot line to neutral connection supplying power to the inverter to ensure voltage is in operating range of the inverter.

3. Upon confirming all voltages are within the inverter's operating range, set the inverter battery breaker to the closed (ON) position. If equipped, close the external battery breaker installed between battery bank and inverter.
4. Power on each battery one at a time, starting with the master, then each additional battery in ~5 second intervals. This should power up the unit.
5. Check the front LED display to confirm unit powers on.

Figure 8.17 – Single Inverter Startup

6. Check for warnings and errors using the LED panel on the front face of the unit of the unit. If the inverter shows "normal" move ahead to the next step.
7. Move the external PV isolator switch to the closed (ON) position (if equipped). Set the PV switch on the side of the inverter to the closed (ON) position. Again, check for errors or warnings via the LED indicators on the front display panel and/or the monitoring center. If the inverter shows "normal" move ahead to the next step. The image below represents the "normal" status in the monitoring center.

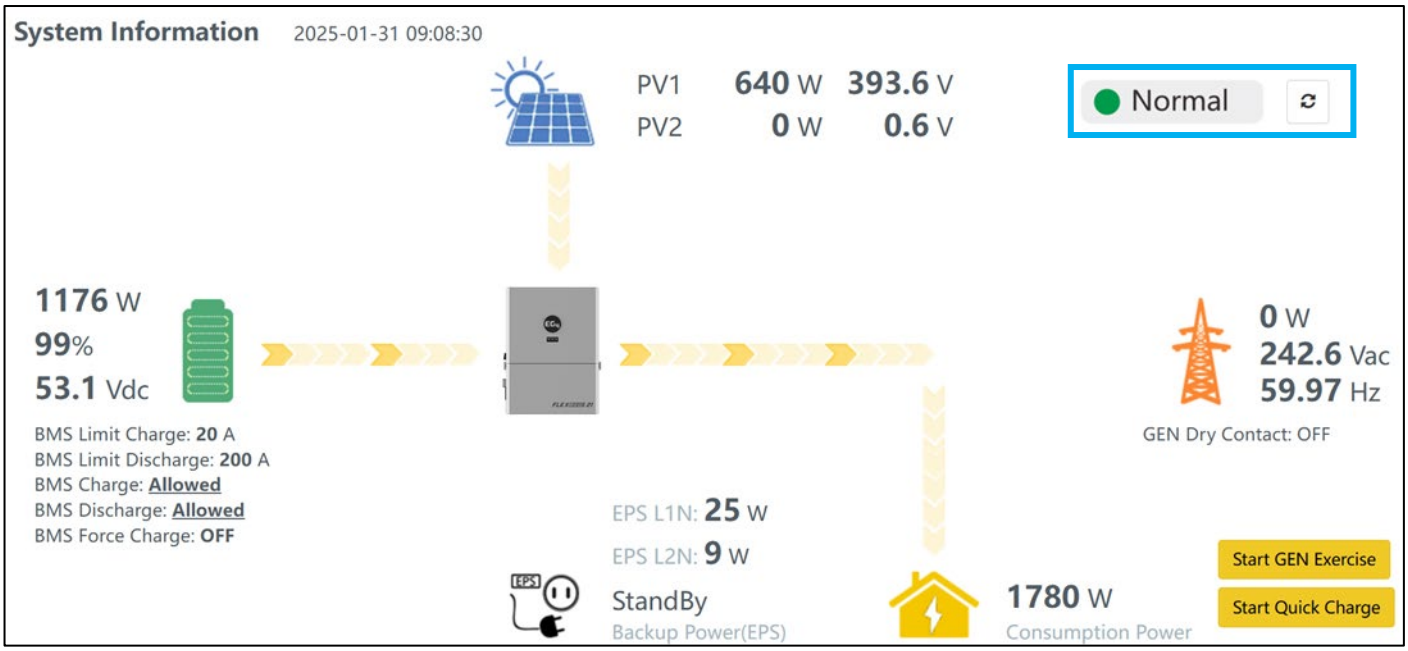

Figure 8.18 – System Information

8. If using grid input, set the external breaker between input panel and inverter to the closed (ON) position. Next, move the inverter GRID breaker to the closed (ON) position. This should provide AC power to the inverter. Again, check for errors or warnings. If the inverter shows "normal" proceed to the next step.
9. Verify the loads panel is ready to accept current from the inverter. Set the input breaker at the loads panel to the closed (ON) position.
10. Set the output breaker on inverter to the closed (ON) position. The inverter should now be providing current to the loads panel.

MULTIPLE INVERTERS

The EG4® FlexBOSS18 supports up to 10 units connected in parallel to reach a capacity of up to 130kW. To successfully connect inverters together in a parallel configuration, verify the following:

- A single string of solar panels cannot be shared between inverters.
- In order to support proper ventilation and cooling, the inverters are installed with required clearances as shown in section 6.2.

CAUTION

Only use the provided parallel cable when connecting the inverters together. Using the wrong cable could cause hardware damage. If a longer cable is required, see image below for more information or contact the distributor.

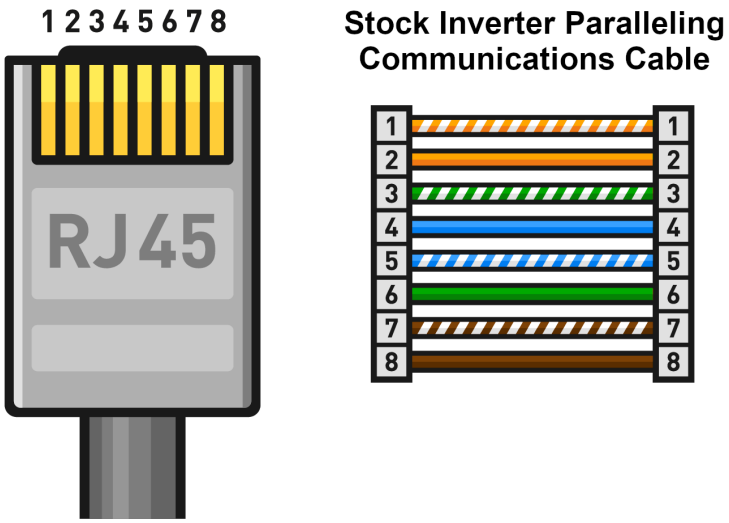

Figure 8.19 – Parallel System Connection

1. Set the CAN communication PIN to ON position for the first and the last inverter. Set the PIN to the OFF position for any inverters between the first and last. Both switches in the “ON” position translates to address 1. Both switches in the “OFF” position translates to address 0.
2. Install the included parallel cable (grey in color) to the parallel port on each inverter as shown in the diagram below. If only two inverters are installed only one parallel cable is required. Two parallel cables will provide redundancy in the event one cable is disconnected or stops working.

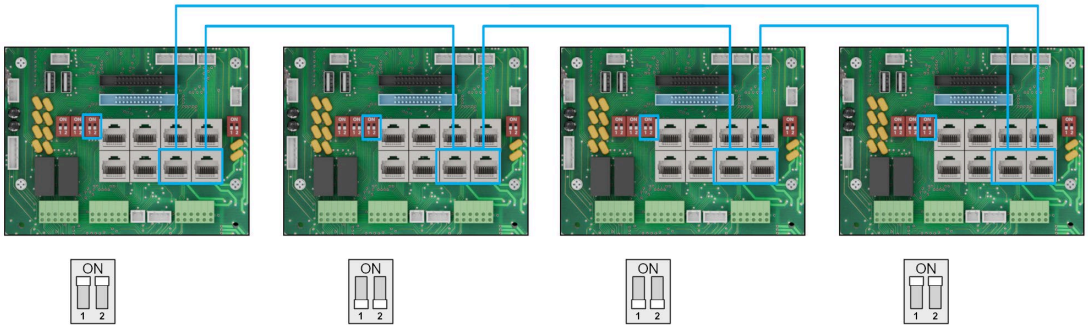

Figure 8.20 – Parallel System Connection 2

3. Ensure each inverter circuit breaker is in the open (OFF) position. No voltage should be coming in or out of the inverter at this point.
4. Using a multimeter, check the following:
    a. Check the battery bank voltage is within operating range at the inverter DC breaker, or the external DC disconnect.
    b. Check the PV voltage is within operating range at input connections of the DC isolation switch.
    c. If utilizing AC input, double check each hot line to neutral connection supplying power to the inverter to ensure voltage is in operating range of the unit.
5. Upon confirming all voltages are within the inverter's operating range, set the inverter battery breaker to the closed (ON) position. If equipped, set the external battery breaker installed between the battery bank and inverter to the closed (ON) position.
6. Begin powering on each battery one at a time, starting with the master. Then power on each additional battery in ~5 second intervals.
7. Move the external PV isolator switch to the closed (ON) position (if equipped). Set the PV switch on the side of the inverter to the closed (ON) position.
8. If using AC input, set the external breaker between input panel and inverter to the closed (ON) position. Next, set the inverter GRID breaker to the closed (ON) position.
9. Check the front LED display to confirm unit powers on.
10. Configure the following settings using the EG4 Monitor Center or mobile app:
    a. Common Tab
    b. Application Tab
    c. Discharge Tab
11. Power off all inverters. Then power on the master. Once the master inverter is powered up, power on each additional inverter.
12. After all the inverters are powered up, double check each inverter and verify the system type is set to "Parallel" and the battery shared option is selected.
13. Ensure the battery communications cable is properly connected from master battery to the master inverter.
14. Using the EG4 Monitor Center, mobile app, or LED indicators on the front of the unit, verify there are no faults or alarms.
15. Verify the loads panel is ready to accept current from the inverter. Set the input breaker at the loads panel to the closed (ON) position.
16. Set the output breaker on inverter to the closed (ON) position. The inverter should now be providing current to the loads panel.

9. REMOTE MONITORING CONFIGURATION

There are multiple ways for the inverter to be programmed and monitored. The most common and convenient are the EG4® Monitor Center Website (monitor.eg4electronics.com) and the EG4 Monitor App. The following sections discuss the various ways to communicate with the inverter.

Monitor Center Website

Monitor Center Overview

Monitor App for Android

Monitor App for Apple

9.1 DONGLE FCC ID'S

Table 9.1 – Dongle FCC ID's

Name/Model	Serial Number (SN)	Dongle Type	FCC ID
1st gen WiFi Dongle	xAxxxxxxxx	WiFi 4 (2.4 Ghz)	P53-EMW3080V2
2nd gen E-WiFi Dongle	xGxxxxxxxx xIxxxxxxxx xJxxxxxxxx	WiFi 5 (2.4 Ghz)	2AC7Z-ESPC3MINII
2nd gen E-WiFi Dongle (Encrypted)	xSxxxxxxxx	WiFi 5 (2.4 Ghz)	2AC7Z-ESPC3MINII
3rd gen E-WiFi Dongle (WiFi 6 single band)	xPxxxxxxxx	WiFi 6 (2.4 Ghz)	2AC7Z-ESPC6MINIU
2nd LAN Dongle	xQxxxxxxxx	WiFi + Ethernet	2AC7Z-ESPWROOM32UE
4G Dongle	xBxxxxxxxx	4G LTE	XMR201606EC21A

9.2 WI-FI DONGLE INSTALLATION

A Wi-Fi dongle is used to monitor the inverter and remotely view the monitoring data on a computer or mobile device. Attach this module by plugging it in to the side of the inverter and securing it with the four (4) Phillips head screws.

For Wi-Fi Dongle troubleshooting, scan the following QR code:

Dongle Troubleshooting Guide

Figure 9.1 – Dongle

9.3 NEW USER ACCOUNT

NOTE

The monitoring system may change due to updates. Therefore, UI descriptions may vary from the current pages on the site. If you have any questions, or to create distributor/installer accounts, contact *support@eg4electronics.com* for additional assistance.

EG4® MONITOR CENTER

After connecting the Wi-Fi dongle, create an account by registering at monitor.eg4electronics.com. For more information on Monitor Center and the settings that can be adjusted there, scan the following QR code:

Monitor Center Overview

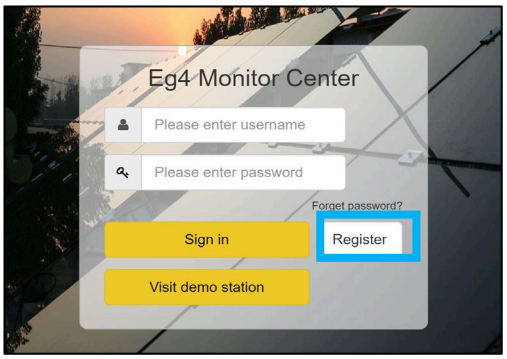

Figure 9.2 – New Account on Monitor Center

EG4 MONITOR APP SETUP

Register a monitoring account and set the Wi-Fi password for the Wi-Fi dongle by following the steps below before using EG4's monitoring system.

1. **Register an account:**
   Visit monitor.eg4electronics.com or download the EG4® Monitor app to register for an end user account. Contact support@eg4electronics.com for distributor or installer accounts.

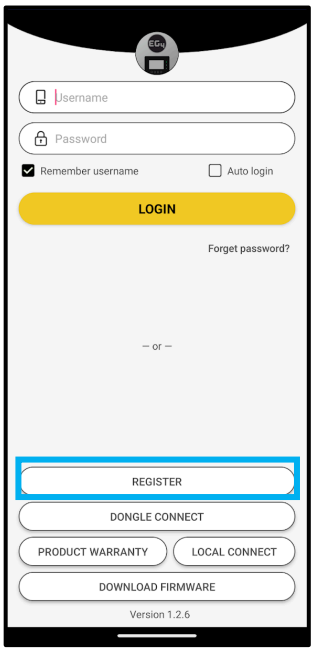

Figure 9.3 – New Account on APP

2. **When registering the account, provide the following information:**
   Select the box to scan the QR code on the dongle shell to automatically input the information.
   a. Customer code: Contact the distributor or installer to obtain this code.
   b. Dongle SN: The serial number is attached to the dongle shell.
   c. Dongle PIN: PIN is attached to the dongle shell below the SN.

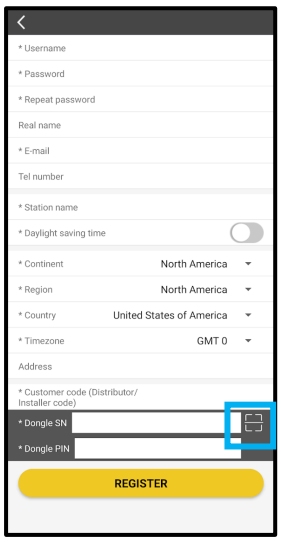

Figure 9.4 – Add Dongle in APP

3. **Set the Wi-Fi password:**
   a. Plug in the Wi-Fi dongle and power on the inverter.
   b. Wait until the INV LED on the Wi-Fi module is solid on, then connect a mobile device to the dongle's Wi-Fi hotspot. The hotspot name is the same as the Wi-Fi dongle serial number.
   c. Open the app. Select the "DONGLE CONNECT."
   d. Select the yellow refresh button to display a list of available networks. Select the desired wireless network name and enter password.
   e. After selecting "HomeWifi Connect," the Wi-Fi dongle will reset. After the correct password is set, three lights will be solid on, which means the inverter is connected to the server. Disconnect the device from the dongle's hotspot and return to the login page and input username and password to begin monitoring the system.

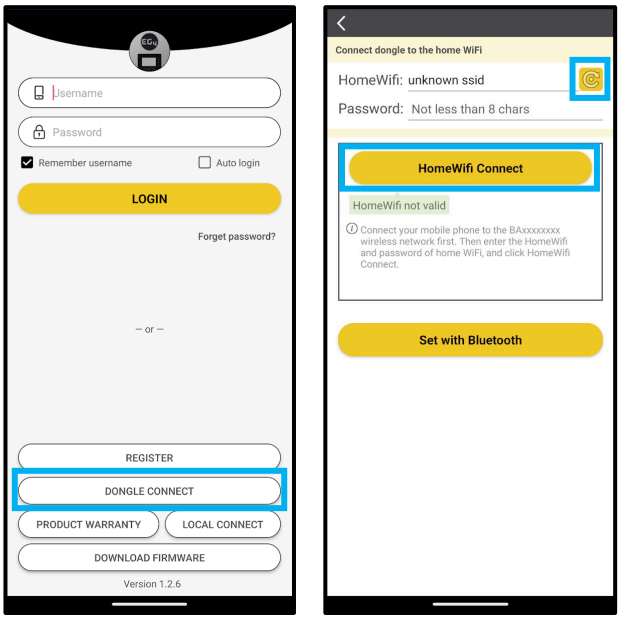

Figure 9.5 – Set the Wi-Fi Password

9.4 EXISTING USER ACCOUNT

When an EG4® account already exists, new EG4 hardware that utilizes a dongle can be added to the existing account. This can be completed using the Monitor Center or the phone app.

USING EG4 MONITOR CENTER:

1. Using a web browser, open "monitor.eg4electronics.com" and login with the existing username and password.
2. Navigate to the "Configuration" tab, then select "Dongles."
3. Select "Add Dongle."
4. Enter the new dongle serial number and pin, select the station to assign the dongle to, then click" Add."
5. The EG4® FlexBOSS18 should now be available in Monitor Center.

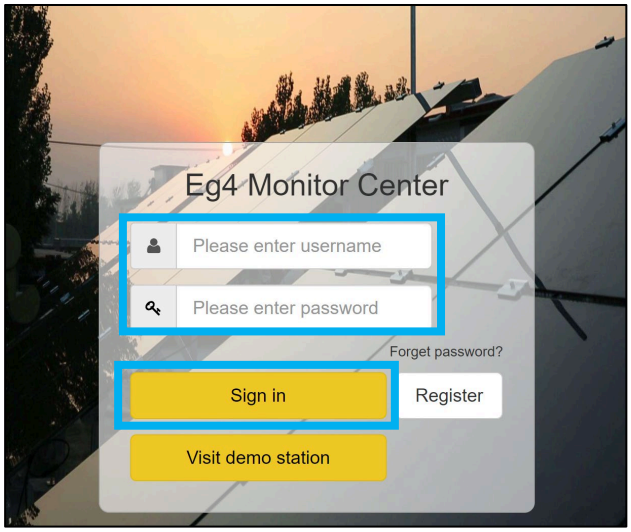

Figure 9.6 – Monitor Center Sign In

USING THE PHONE APP:

1. Open the "EG4 Monitor" app and login using an existing name and password.
2. Select the back arrow in the upper left corner of the screen.
3. Select "Add Dongle." Scan or enter the dongle information located on the dongle sticker, then press "Add Dongle."

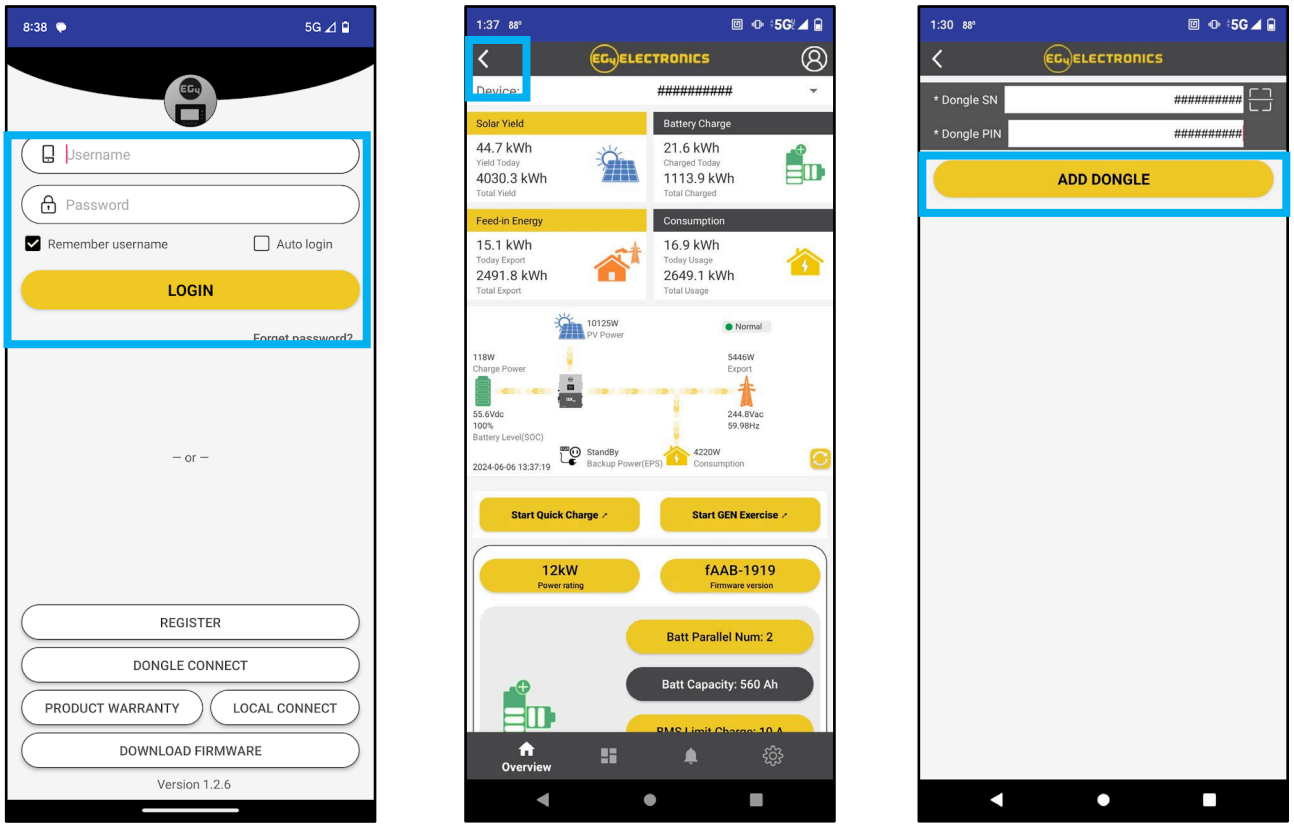

Figure 9.7 – Adding a Dongle

10. MONITORING CENTER OVERVIEW

For the full list of EG4 Monitor Center settings and their functions, refer to the QR code below; the accompanying video provides additional guidance on using the Monitor Center.

EG4 Monitor Center Overview

EG4 Monitor Center Video

10.1 WORKING MODES AND WEATHER OPTIMIZATION SETTINGS

NOTICE

These settings may need to be adjusted after installation. Consult with the distributors before making any changes to avoid conflicting settings or damage to the system!

TIME OF USE

Used to maximize cost savings by flexibly adjusting the battery's usage pattern, establishing a real-time connection with the grid, and providing live updates on current electricity prices. This enables the system to meet energy demands across different time periods, provide real-time system status, and provide detailed reports. This feature is customizable to individual needs and fluctuations in electricity prices.

WEATHER OPTIMIZE FUNCTION

The weather optimize function is used to collect real-time weather data and use that data to control the inverter. There are multiple operating modes to adapt to various scenarios:

- **Charge Priority Mode** prioritizes battery charging to ensure stable electricity usage, making it ideal for areas with unstable power supply.
- **Self-Use Mode prioritizes** self-generated solar power to meet household electricity demands, making it ideal for areas with high electricity prices.
- **Forced Charge/Discharge Mode** chooses to charge or discharge batteries based on electricity pricing, making it ideal for time-of-use pricing areas.
- **Intelligent Charging Control** automatically adjusts the state of charge to maximize the efficient use of solar energy based on real-time weather information.
- **Stable Electricity Usage** optimizes charging strategies based on weather conditions, ensuring the battery remains adequately charged for stable electricity consumption.

1. To enable this feature, first select "Maintenance" at the top of the Monitor Center webpage, next choose "Weather Optimization" from the left-hand menu, and then select the desired inverter and click the location button.

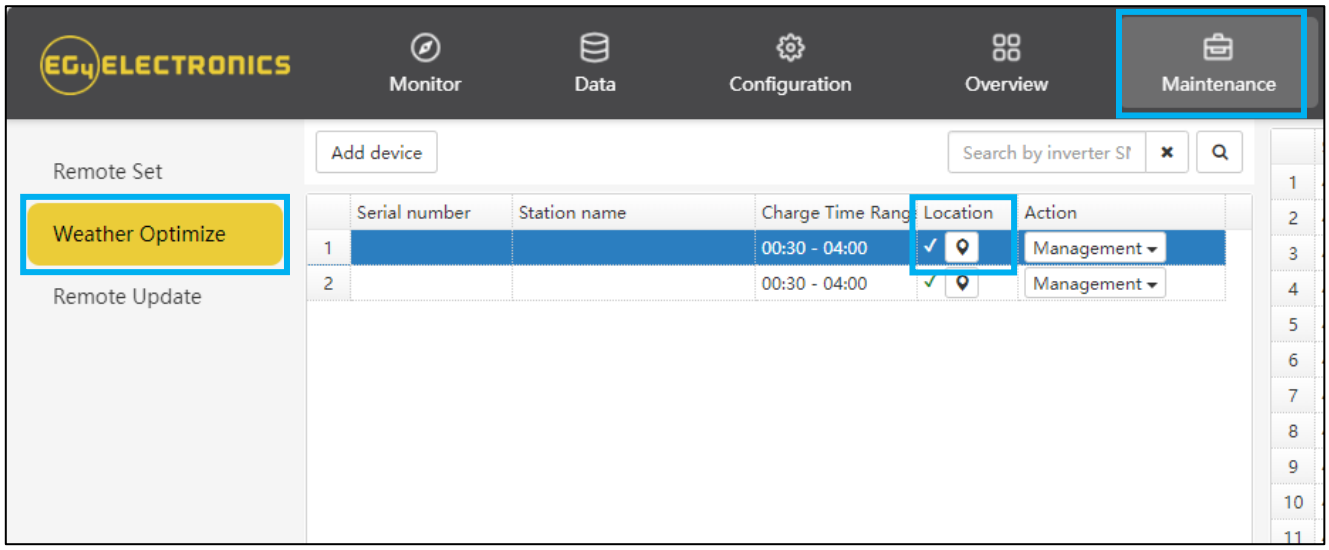

Figure 10.1 Weather Optimize Function 1

2. Input the inverter's information on the next screen and select update.

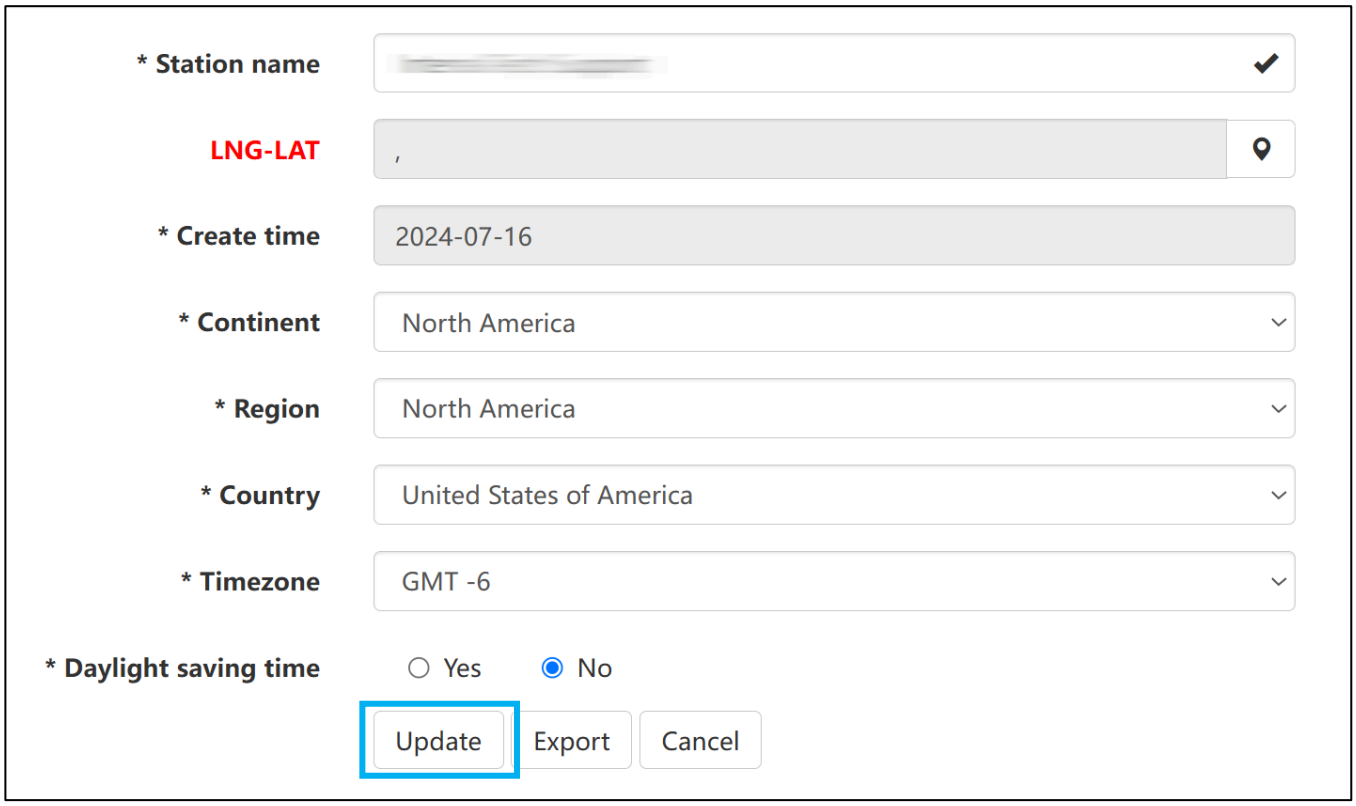

Figure 10.2 – Weather Optimize Function 2

3. Afterwards, select “Management,” then “Edit.

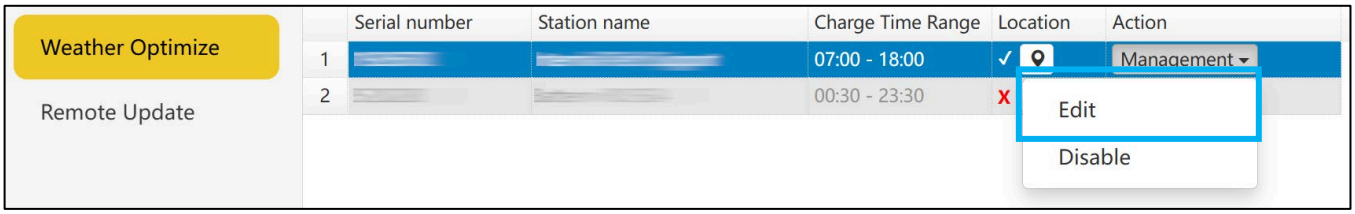

Figure 10.3 – Weather Optimize Function 3

4. Set charging times and percentages based on electricity use patterns and weather conditions. The platform sends user settings to the inverter, and the inverter provides feedback, confirming the receipt of setting and executing charging operations according to user-defined parameters.

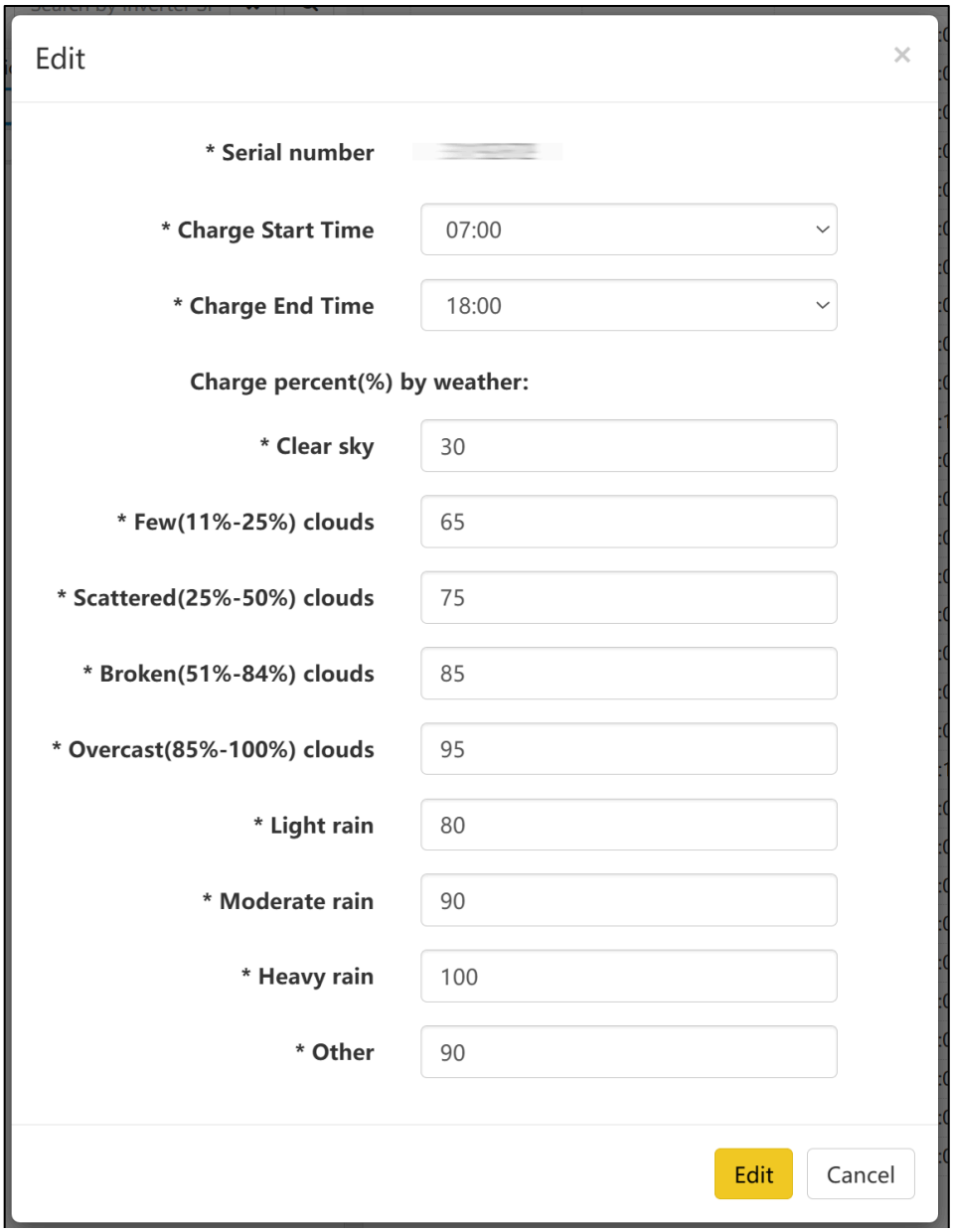

Figure 10.4 – Weather Optimize Function 4

WORKING MODES

Working modes are pre-set priority systems that allow users to configure the system to meet their demands through extensive customizations. These modes can be found under the Maintenance tab by clicking “Working Mode.” Scroll past “Application Setting” to the “Working Mode Setting” section.

Figure 10.5 – Working Modes

WORKING MODE DEFINITIONS:

- **Backup Mode:** Battery power used as a last resort. The solar array powers the loads, and when PV is insufficient, loads will pull from the grid. The inverter will only power loads with battery when PV and AC input is unavailable.
- **Peak Shaving:** Used to avoid peak demand charges from the grid by using a combination of settings to limit the power drawn from the grid.
- **AC Charge Mode:** Used to charge batteries with grid power when electricity prices are cheap, and discharge battery power to supply load or export to the grid when electricity prices are high.
- **PV Charge Priority:** Used to charge battery bank with PV; once battery bank is charged, then PV will be used to power loads.
- **Forced Discharge/Export PV Only:** Used to sell PV and/or battery power back to the grid.
- **Self-Consumption:** Used to significantly lower grid consumption. Solar arrays power loads and, when PV is insufficient, batteries power loads; AC is only used as a last resort.

BACKUP MODE

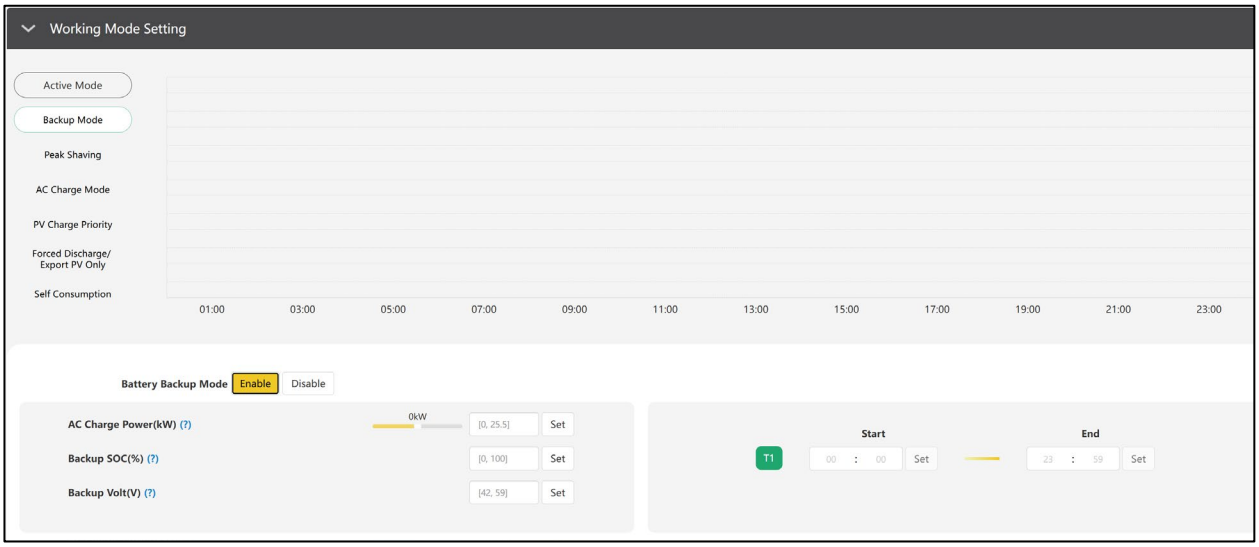

Figure 10.6 – Backup Mode

- **Battery Backup Mode:** When enabled, the system will use the batteries as a last resort during the set timeframes.
- **AC Charge Power (kW):** The maximum charging power from grid.
- **Backup SOC(%):** Set the maximum SOC for backup. This parameter is the same as Stop AC Charge SOC.

- **Backup Volt(V):** Set the maximum Voltage for backup. This parameter is the same as Stop AC Charge Volt.
- **Start/End Times:** Set times to begin and end Backup Mode.

PEAK SHAVING

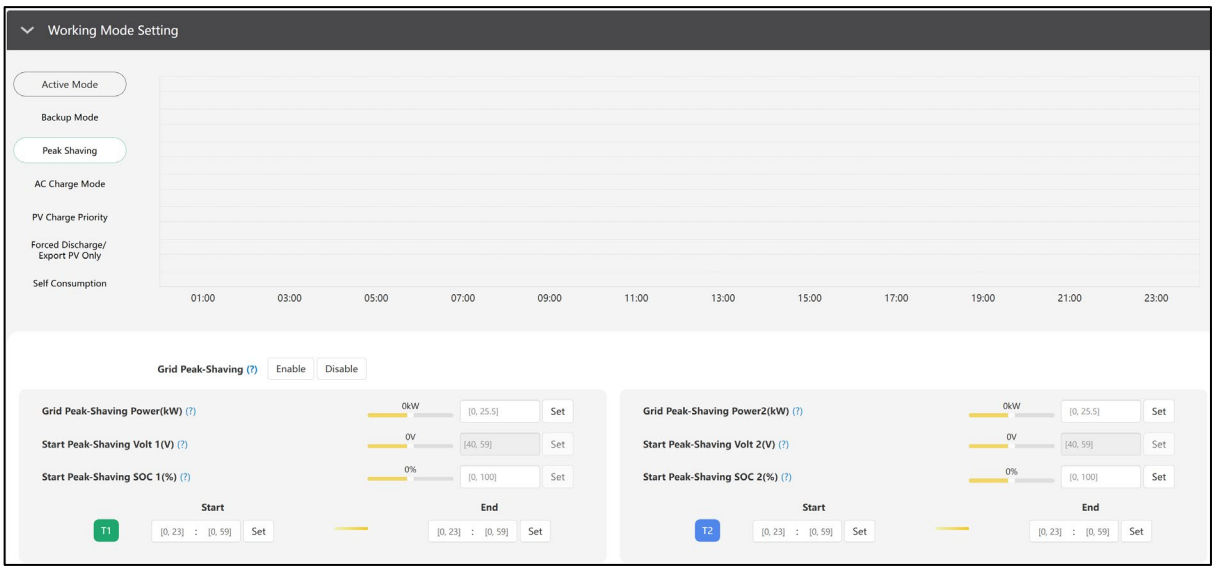

Figure 10.7 – Peak shaving

Grid Peak-Shaving: Enable grid peak-shaving.

- **Grid Peak-Shaving Power(kW)/Grid Peak-Shaving Power2(kW):** Set the maximum amount of power that will be drawn from the grid.
- **Start Peak-Shaving Volt 1(V)/Start Peak-Shaving Volt 2(V):** Set the starting point of peak-shaving when using voltage setpoints for batteries.
- **Start Peak-Shaving SOC 1(%)/Start Peak-Shaving SOC 2(%):** Set the starting point of peak-shaving when using SOC setpoints for batteries.
- **T1/T2 Start/End:** Set the start/end time of peak-shaving depending on SOC/voltage as configured above.

AC CHARGE MODE

AC Charge Enable: Enable the system's ability to charge batteries from the grid.

- **AC Charge Power(kW):** Set the maximum power drawn from the grid to charge batteries.
- **AC Charge Based On (SOC/Volt/Time):** Configure how the system will charge batteries from the grid by setting custom voltage points, SOC of batteries, or by time.
- **Start/Stop AC Charge SOC(%):** Set the starting point of AC Charging when using SOC setpoints for batteries.
- **Start/Stop AC Charge Volt(V):** Set the starting point of AC Charging when using voltage setpoints for batteries.
- **T1/T2/T3 Start/End:** Set the start/end time of AC Charge mode depending on SOC/voltage as configured above.

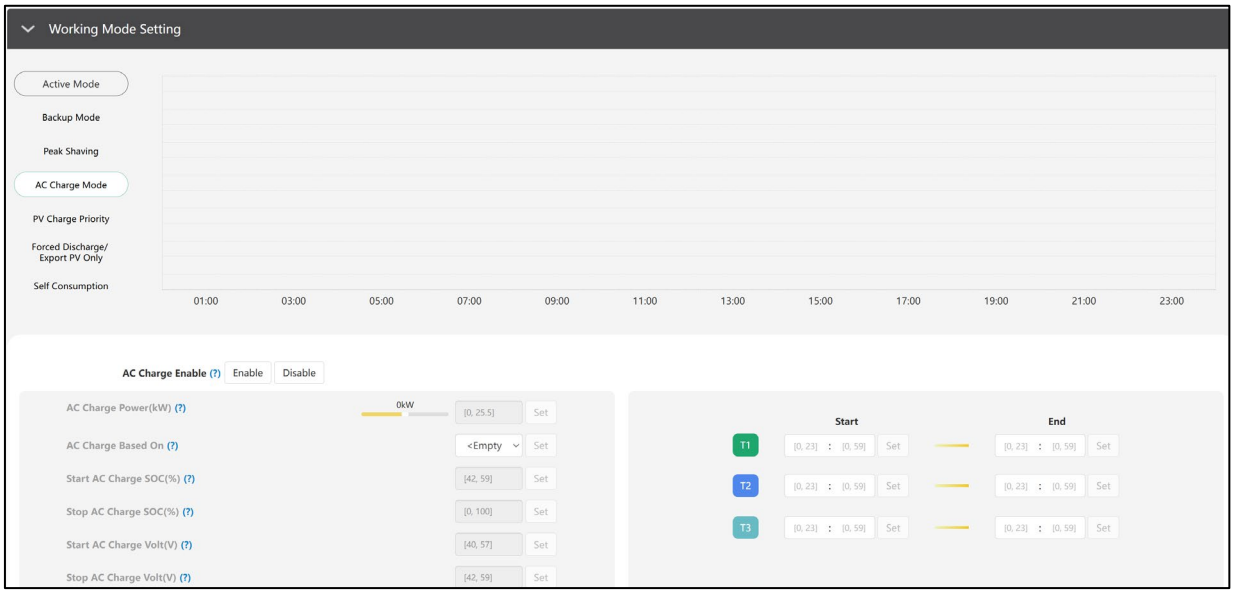

Figure 10.8 – AC Charge Mode

PV CHARGE PRIORITY

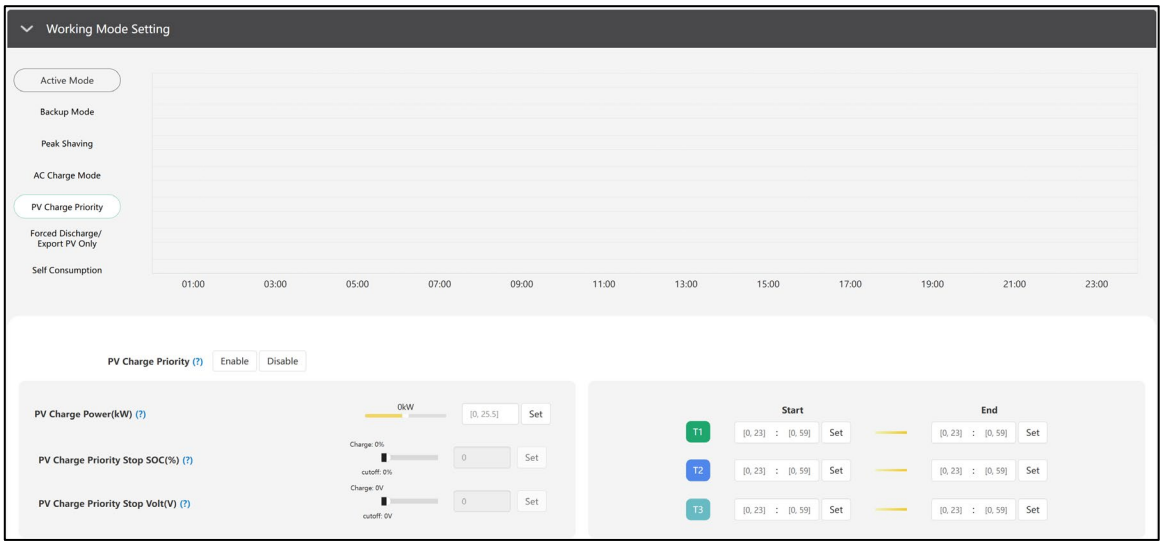

Figure 10.9 – PV Charge Priority

The order of priority for solar power usage will be Battery >Load >Grid. During the “PV Charge Priority” period, loads are first supplied power from the grid. If there is excess solar power after charging batteries, the excess solar will power the loads along with grid power.

- **PV Charge Priority:** Enable the Battery Priority/PV Charge Priority working mode.
- **PV Charge Power(kW):** Set the maximum amount of power to charge the batteries from solar.
- **PV Charge Priority Stop SOC(%)/Volt:** Set the stop point for PV Charge Priority according to SOC or Voltage.
- **T1/T2/T3 Start/End:** Set up to three different start and stop times for the PV Charge Priority working mode.

FORCED DISCHARGE/EXPORT PV ONLY

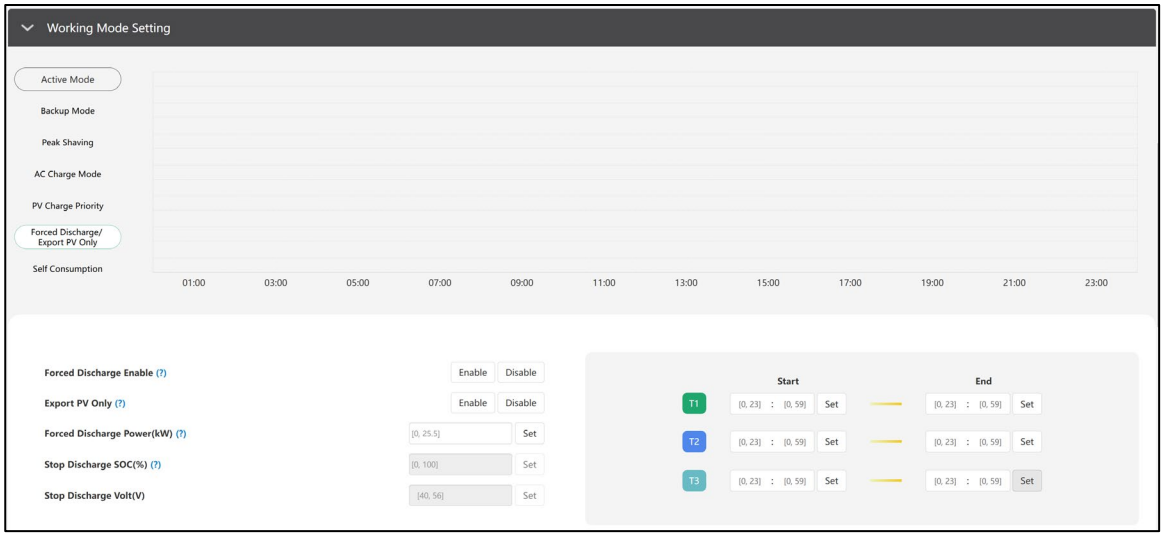

Figure 10.10 – Forced Discharge/ Export PV Only

- **Forced Discharge Enable**: Enable this setting to forcefully discharge the station’s battery bank.
- **Export PV Only**: Enable this setting to sell back generated PV power to the grid.

- **Forced Discharge Power(kW):** Set the maximum power limit of battery discharge.
- **Stop Discharge SOC(%)/Volt**: Stop the forced discharge upon reaching the set SOC/ voltage point.
- **T1/T2/T3 Start/End:** Set up to three different start and stop times for the Force Discharge/Export PV Only working mode.

SELF CONSUMPTION

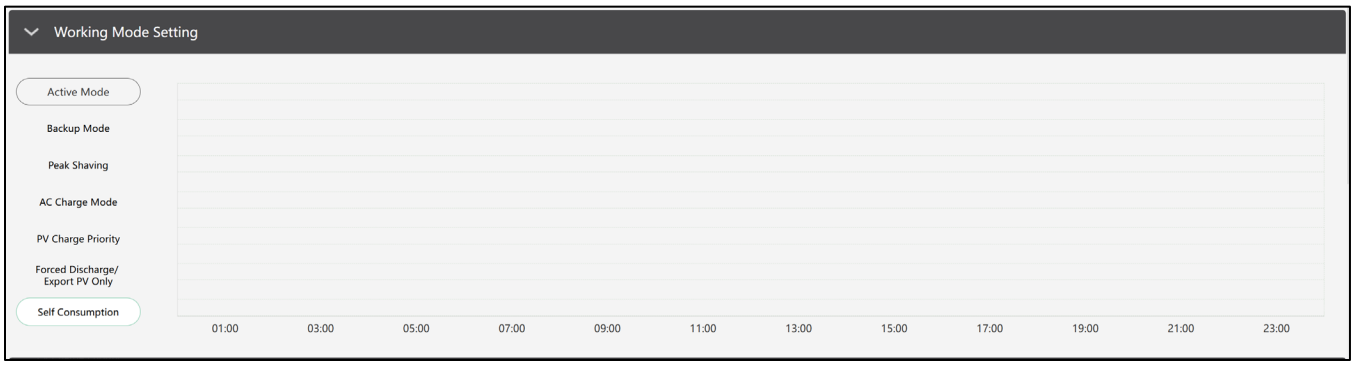

Figure 10.11 – Self Consumption

The system will default to Self-Consumption mode. The order of priority for powering loads is Solar > Battery > Grid. The order priority for solar power is Load > Battery > Grid which creates an ideal scenario when needing to prioritize solar power generation over other types of power. Self-Consumption mode will increase the self-consumption rate of solar power and reduce energy bills significantly. Effective when Charge Priority, AC Charge, and Forced Discharge are disabled.

11. POWER CONTROL SYSTEM

11.1 EXPORT LIMITING FROM ALL SOURCES (PEL)

A. **Export to Grid:** Enables power export to the grid.
B. **Max export to Grid (kW):** Sets the maximum allowable power export to the grid setting.
   a. **Note:** To allow power export from the inverter to the grid, “Export to Grid” must be enabled, and “Max Export to Grid” must be set to a value greater than 0. This value defines the upper limit of export power.
C. **Zero Export:** Disables all power export to the grid.

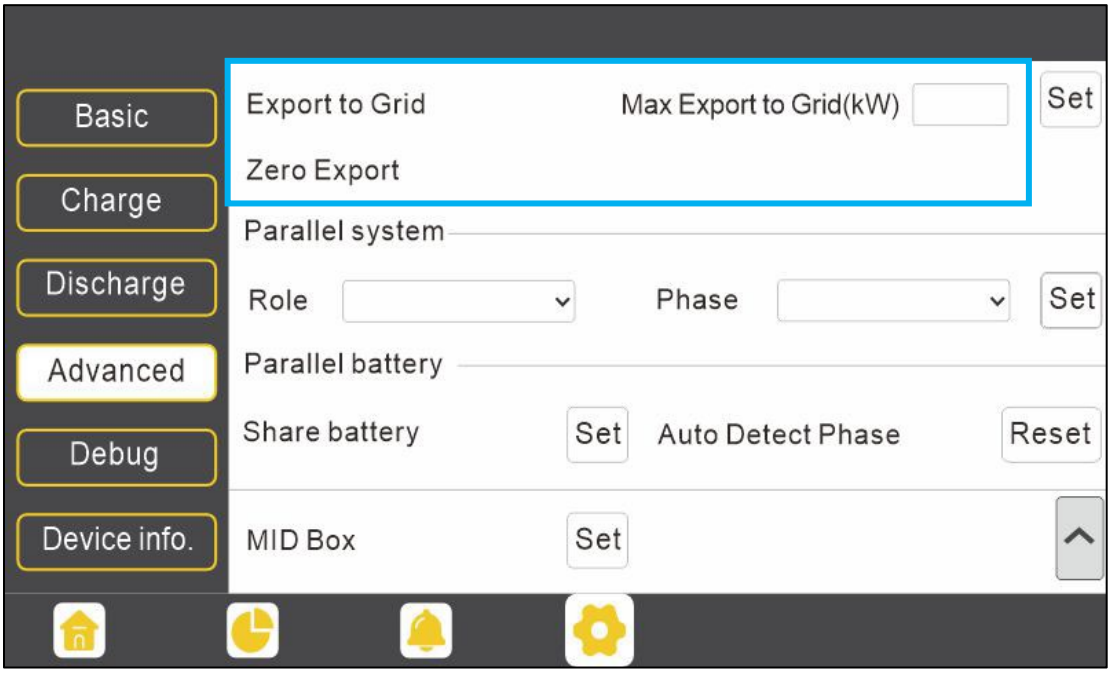

Figure 11.1 – Zero Export

D. **Discharge current limit (A):** Defines the maximum discharge current allowed from the battery.

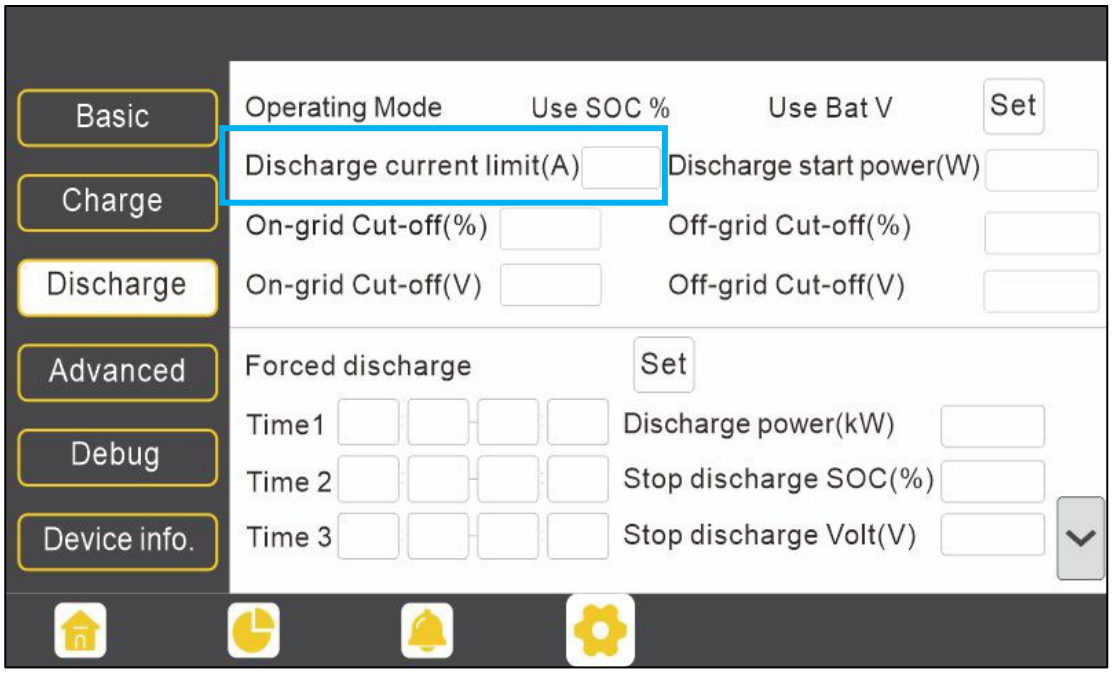

Figure 11.2 – Discharge Current Limit (A)

E. **Discharge power (kW):** Sets the maximum power the battery can deliver when the *Forced Discharge* function is enabled.

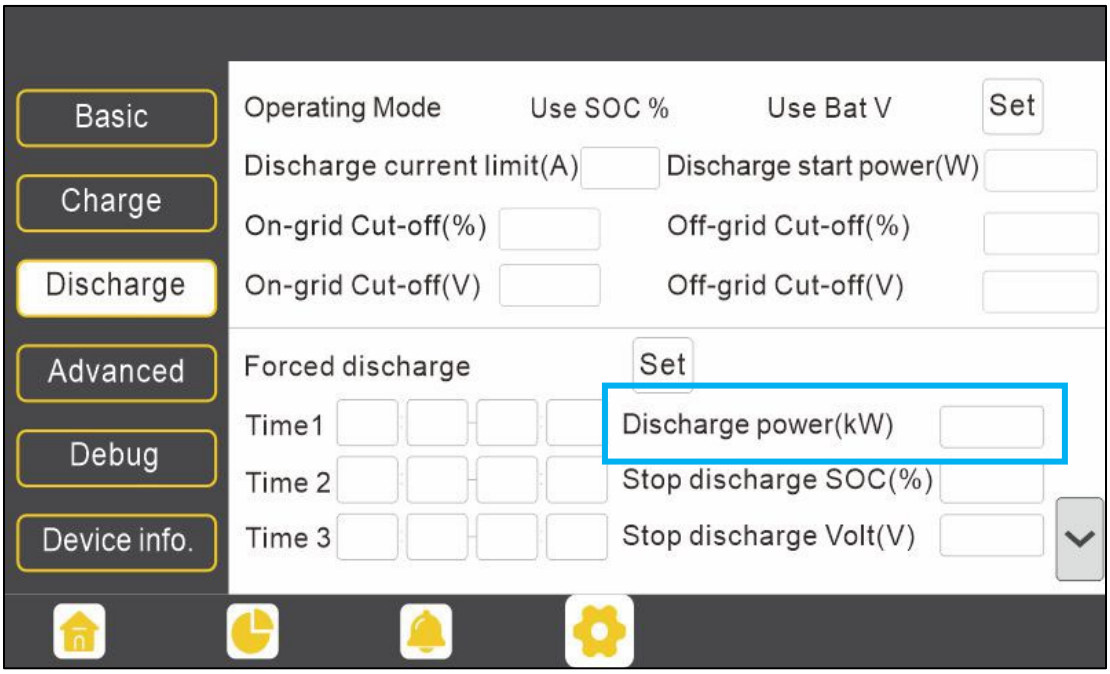

Figure 11.3 – Discharge Power (kW)

PREREQUISITE: EXPORT TO GRID IS ENABLED.

For example: Max Export to Grid is 5kW.

- If the system has battery power but there is no PV coming in (perhaps because the sun is down, or because it does not have PV established in the system). To export power to the grid, the *Forced Discharge* function must be enabled.
    - If Discharge Power is set to 4kW, and the Discharge Current Limit is set to 200A, with a nominal battery voltage of 50V (200A * 50V = 10,000W, indicating the power that the battery can output), then the system will export 4kW to the grid.
    - If the Discharge Current Limit is reduced to 50A (With the other settings unchanged from the previous example), the system will export only 2.5kW (50A * 50V).
- If the system has PV and battery, but *Forced Discharge* is disabled:
    - Only excess PV power is exported to the grid. The battery does not discharge to the grid.
- If the system has PV and battery, and *Force Discharge* is enabled:
    - Both PV and battery output their available power to the grid, up to the set limits.

11.2 ESS MODE

- **Unrestricted Mode:** The ESS may import active power from the Area EPS while charging and may export active power to the Area EPS while discharging.
- **Export Only Mode:** The ESS may export active power to the Area EPS during discharging but shall not import active power from the Area EPS for ESS charging purposes.
- **Import Only Mode:** The ESS may import active power from the Area EPS for charging purposes but shall not export active power from the ESS to the Area EPS.
- **No Exchange Mode:** The ESS shall not exchange active power with the Area EPS for charging or discharging purposes.

NOTE

This mode is alternatively known as “No Export Mode”.

Table 11.1 – ESS Mode

MODE	MAXIMUM CURRENT (CHARGING)	MAXIMUM CURRENT (DISCHARGING)	OVERCURRENT PROTECTION (CHARGING)	OVERCURRENT PROTECTION (DISCHARGING)
Unrestricted Mode	48.08A/208V 41.67A/240V	54.17A	60.096A (125%)	67.708A (125%)
Export Only Mode	0A	54.17A	N/A	67.708A (125%)
Import Only Mode	48.08A/208V 41.67A/240V	0A	60.096A (125%)	N/A
No Exchange Mode	0A	0A	N/A	N/A

SCHEMATIC DIAGRAM

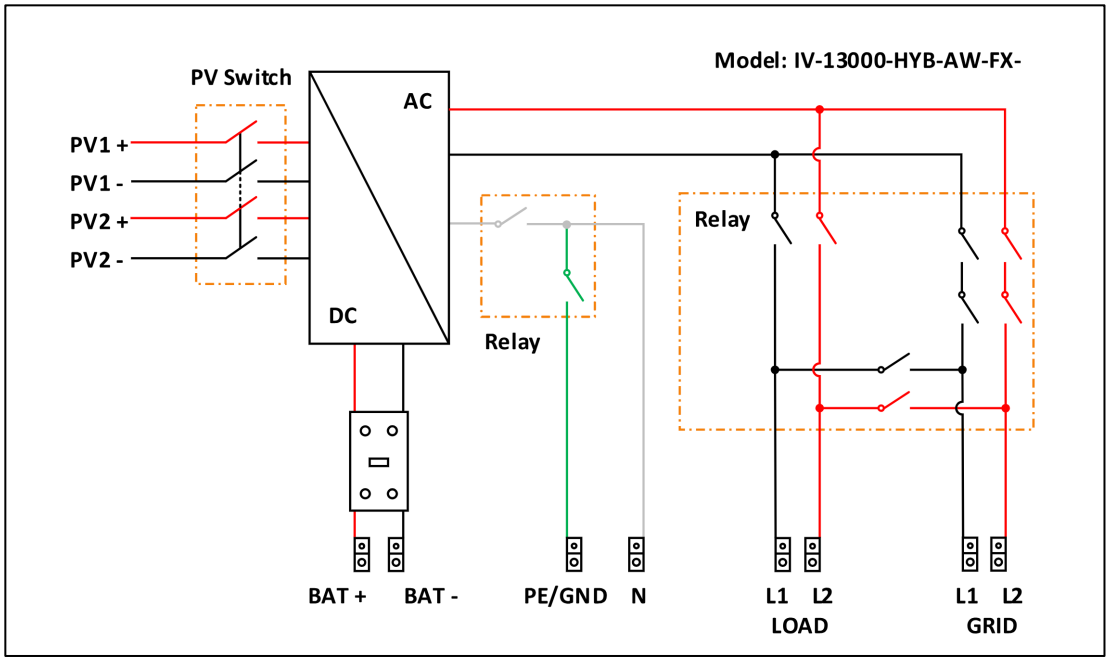

Figure 11.4 – Schematic Diagram

MODE DESCRIPTIONS

Table 11.2 – Mode Descriptions

ITEM	MODE	TIME
1	Step Change in Load Test	The average open loop response time: 0.37s The maximum open loop response time:0.85s
2	Step Change in Generation Test	The average open loop response time:0.12s The maximum open loop response time:0.35s
3	Export limiting from all sources	The average open loop response time:1.92s The maximum open loop response time:2.00s
4	Import limiting from all sources	The average open loop response time:1.11s The maximum open loop response time:1.95s
5	ESS Operating Modes Unrestricted Mode	The average open loop response time:0.37s The maximum open loop response time:0.85s
6	ESS Operating Modes Export Only Mode	The average open loop response time:0.22s The maximum open loop response time:0.70s
7	ESS Operating Modes Import Only Mode	The average open loop response time:0.43s The maximum open loop response time:0.95s
8	ESS Operating Modes No Exchange Mode	The average open loop response time:0.12s The maximum open loop response time:0.35s
9	Export limiting from Energy Storage Systems	The average open loop response time:0.22s The maximum open loop response time:0.70s
10	Import limiting to Energy Storage Systems	The average open loop response time:0.43s The maximum open loop response time:0.95s

12. RAPID SHUTDOWN/ESS DISCONNECT

12.1 OVERVIEW

The inverter includes a rapid shutdown system with built-in RSD transmitter and RSD/ESS disconnect initiator. In case of emergency, press the rapid shutdown button to cut off the power supply, cutting the inverter's AC output along with dropping the PV conductor's voltage to <30V in 30 seconds.

Figure 12.1 – RSD/ESS Disconnect

NOTE

When using supported EG4® batteries in closed-loop communications with the inverter, the RSD also initiates ESS disconnect as required by NEC code.

12.2 EXTERNAL RSD/ESS DISCONNECT

The system can utilize an External E-Stop Switch if the local AHJ deems it necessary.

- The external switch must be "Normally Closed" by default, and "Open" when the button is pressed for emergency shutdown.
- The external switch should be connected to the RSD terminals on the inverter and mounted on a readily accessible location outdoors (check with the local AHJ for requirements).
- Remove jumper from external RSD connection and wire the E-Stop Switch into the RSD terminals according to the switch's specifications.

EXTERNAL RSD WIRING

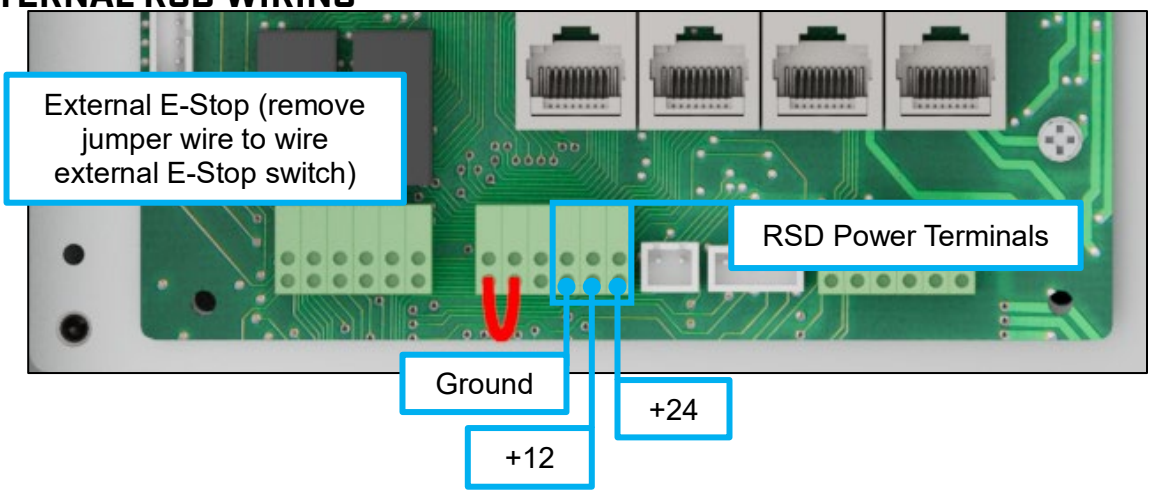

Figure 12.2 – External Disconnect

13. WORKING WITH A GRIDBOSS

While the FlexBOSS18 is a hybrid inverter that is capable of functioning on its own, pairing it with the EG4® GridBOSS allows for more flexibility and functionality.

Table 13.1 – Working with a GridBOSS

FUNCTION	DESCRIPTION
AC Coupling	Allows the user to pair the FlexBOSS18 and Grid BOSS with existing or new grid-tie only inverters.
Smart Loads	Smart loads control devices that are powered on or off according to grid presence, state of charge, TOU, and/or the presence and level of PV power.
Generator Functions	Allows the user the option of a backup generator for when the grid is down, and PV is insufficient to power loads.

CAUTION

When pairing with GridBOSS, ensure the FlexBOSS18's firmware is updated to at least version 1E1E or the units will not operate as intended!

When installing both GridBOSS and FlexBOSS18 together:

- Check that the firmware is up to date, with the minimum firmware being 1E1E.

NOTE

Once the firmware has been updated, it cannot be undone.

- Ensure the mounting wall is strong enough to bear the weight of all units.
- Maintain at least 150 mm of spacing on each side between units.
- Observe all environmental specifications for all units.
- The Loads port will not be used on the FlexBOSS18.
- The CT clamps provided with the inverter will not be used as all input/output data will be tracked by GridBOSS.
- Ensure that all parallel inverters are configured before configuring GridBOSS.

For more information on GridBOSS and specific use cases, scan the following QR code:

14. INVERTER MAINTENANCE

Electrical equipment must be properly maintained to increase longevity and consistency. Follow the steps below to help prevent component damage/deterioration:

1. Inspect the inverter every month to confirm nothing covers the inverter's vents. If it is covered, shut down the inverter and clear the vents to restore proper cooling.
2. Inspect the inverter every 3 months to verify the operating parameters are normal, and there is no abnormal heating or noise from any components in the system.
3. Inspect the inverter every 6 months to check for any damaged cables, accessories, or terminals.

If unable to identify the source of any abnormal operations, contact the distributor's technical support team for additional information.

14.1 START-UP & SHUTDOWN PROCEDURES

STARTING UP THE INVERTER

1. If using an external DC breaker between the battery bank and the inverter, turn it on. If not, turn on the BAT breaker located in the cable box of the inverter and then power on the battery system one battery at a time.
2. Make sure the PV voltages of the strings are within operating parameters (120 – 440 VDC). Turn on the PV isolator switches between the inverter and array and then turn on the PV Disconnect switch on the side of the inverter.
3. Make sure Steps 1 and 2 are running properly and then turn on the grid power breaker.
4. Ensure there the inverter shows "normal" operations in the monitoring center and the LEDs on the front of the unit.
5. Power on the load breakers in the load panel.

DANGER

Avoid shutting down the inverter while under heavy loads. To minimize stress on the inverter, shut down in the following sequence. In case of emergency, use the RSD.

SHUTTING DOWN THE INVERTER

1. Set the inverter into Standby mode using either the mobile app or EG4® Monitor Center.
2. Switch off the load breaker.
3. Turn off the grid breaker feeding the inverter.
4. Turn off the PV disconnect and then the battery breaker. Wait for the LEDs on the front of the unit to go off.

14.2 FIRMWARE UPDATES VIA THE EG4® ELECTRONICS APP

Before updating firmware through the EG4® Monitor app, ensure the mobile device being used has enough battery life to last through the update. While the update is ongoing, do not close the application. Ensure the Wi-Fi dongle is securely connected and correctly configured (see section 7.1 for details) before performing the following steps:

1. Open the EG4 Electronics app on a mobile device and select the "DOWNLOAD FIRMWARE" button.
2. Choose the correct firmware file (*see eg4electronics.com for the most up-to-date files*) and select "DOWNLOAD" on the right side to download the file to the mobile device.
3. Keep the app running and go to the mobile device's Wi-Fi settings. Connect the mobile device to the dongle's Wi-Fi network. The dongle's network ID will be the same as the dongle's serial number.
4. Return to the home screen of the app and select "LOCAL CONNECT." Select the "Set" button on the bottom right side and proceed to the next step.
5. After completing step 4, the Local Set Interface will appear. Swipe to the bottom of the screen and select "UPDATE FIRMWARE."
6. Choose the correct installation package in the dropdown box and select "UPDATE FIRMWARE" to begin the updating process.

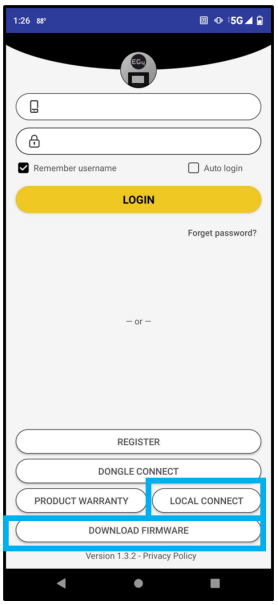

Figure 14.1 – Firmware Update Via App

After selecting the "UPDATE FIRMWARE" button, the update will begin. Update progress can be viewed via the app. Once the update is completed, a notification will appear confirming that the firmware has been successfully updated. After successfully updating firmware, the inverter will restart itself. Make sure to update all inverters installed in the same Energy Storage System (ESS) to the latest firmware version.

14.3 FIRMWARE UPDATE VIA MONITORING CENTER (WEBSITE)

1. Users can update firmware by using the EG4® Electronics website monitoring system. Contact EG4® to make sure the files are correct.
2. Log in to the EG4® Electronics Monitor System. Select "Maintenance," and then select "Remote Update."
3. Choose the inverter to update and then select "Standard Update." The Monitor Center will begin updating both firmware files in the inverter. The latest version of the firmware will be displayed in the bottom right window.

NOTICE

Throughout the update, the inverter will automatically cycle power as it moves from one update to the next; however, if at any time an "Update Failed" alert appears, restart the full update from the first task. The "Update Failed" alert will only appear in the monitoring center. The software may need more than one attempt to update. If unable to successfully update the firmware, contact the distributor.

15. INVERTER TROUBLESHOOTING

If a warning or fault occurs, users can troubleshoot according to the LED status description and the warning/fault information found in the “Event History” tab on the app or Monitor Center website.

Table 15.1 – Inverter Troubleshooting

LED	DISPLAY	DESCRIPTION	ACTION
Green LED	Solid on	Working normally	No action needed
	Flashing every 1 sec	Standby	No action needed
	Flashing every 0.1 sec	Firmware updating	Wait until the update is complete
Yellow LED	Solid on	Warning, inverter may stop working	Needs troubleshooting
Red LED	Solid on	Fault, inverter will stop working	Needs troubleshooting

Website

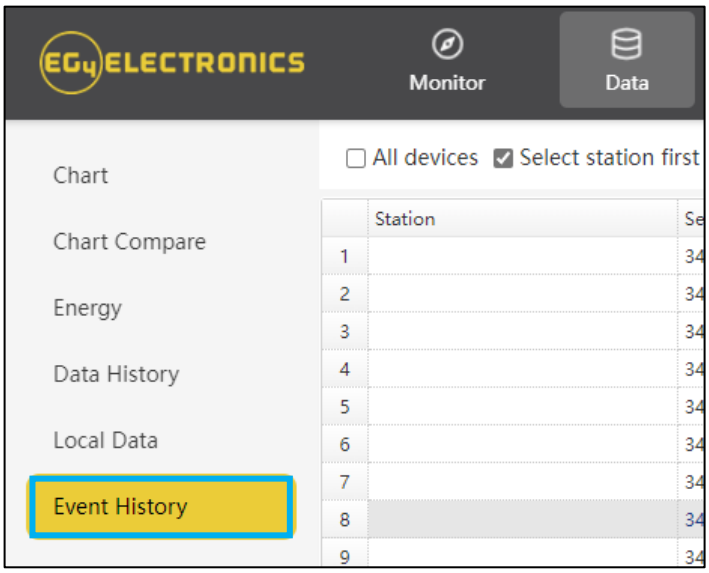

Mobile App

Figure 15.1 – Event History

15.1 FAULT DEFINITIONS & TROUBLESHOOTING

Table 15.2 – Fault Troubleshooting

FAULT	MEANING	TROUBLESHOOTING
M3 Rx failure	M3 microprocessor fails to receive data from DSP	Restart the inverter. If the error persists, contact the distributor.
Model fault	Incorrect model value	
EPS short circuit	Inverter detected short-circuit on load output terminals	1. Check if the L1, L2, and N wires are connected correctly at the inverter load output terminal. 2. Restart the inverter. If the fault persists, contact the distributor.
EPS power reserved	Inverter detected short circuit on load terminal	Restart the inverter. If the fault persists, contact the distributor.
Bus short circuit	DC Bus is short circuited.	
Relay fault	Relay abnormal	
M8 Tx failure	DSP fails to receive data from M8 microprocessor	
M3 Tx failure	DPS fails to receive data from M3 microprocessor	
Vbus over range	DC Bus voltage too high	Ensure the PV string voltage is within the inverter specification. If string voltage is within range and this fault persists, contact the distributor.
EPS connect fault	Load terminal and grid terminal are wired incorrectly or reversed	Check if the wires on load terminal and grid terminal are wired correctly. If the fault persists, contact the distributor.
PV volt high	PV voltage is too high	Check if the PV string voltage is within the inverter specification. If string voltage is within range and this fault persists, contact the distributor.
Hard over curr	Hardware level over current protection triggered.	Restart the inverter. If the fault persists, contact the distributor.
Neutral fault	Voltage between N and G is greater than 30V	Ensure the neutral wire is connected correctly.
PV short circuit	Short circuit detected on PV input	Disconnect all PV strings from the inverter. If the error persists, contact the distributor.
Temperature fault	Heat sink temperature too high	Install the inverter in a place with good ventilation and no direct sunlight. If the installation site is okay, check if the NTC connector inside the inverter is loose.

Bus sample fault	Inverter detected DC bus voltage lower than PV input voltage	Restart the inverter, if the fault persists, contact the distributor.
Inconsistent	Sampled grid voltage values of DSP and M8 microprocessors are inconsistent	
M8 Rx fault	M8 microprocessor fails to receive data from DSP	
Para Comm error	Parallel communication abnormal	1. Check whether the connection of the parallel cable is loose. Connect the parallel cable correctly. 2. Ensure the PIC status of the CAN communication cable from the first to the end inverter is connected correctly.
Para master loss	No master in the parallel system	1. If a master has been configured in the system, the fault will automatically be removed after the master works. 2. If a master has not been configured and there are only slaves in the system, set the master first. Note: For a single-unit system, the role of the inverter should be set as “1 Phase Master.”
Para rating Diff	Rated power of parallel inverter(s) are inconsistent	Confirm that the rated power of all inverters is the same.
Para Phase set error	Incorrect setting of phase in parallel	Confirm the wiring for the parallel system is correct. Once verified, connect each inverter to the grid. The system will automatically detect the phase sequence, and the fault automatically resolves after the phase sequence is detected. If the fault persists, contact the distributor.
Para sync loss	Parallel inverter fault	Restart the inverter. If the fault persists, contact the distributor.

15.2 ALARM DEFINITIONS & TROUBLESHOOTING

Table 15.3 – Alarm Troubleshooting

ALARM	MEANING	TROUBLESHOOTING
Bat com failure	Inverter fails to communicate with battery	Check if the communication cable pinout is correct, and if the correct battery brand has been chosen. If all is correct but this alarm persists, contact the distributor.
AFCI com failure	Inverter fails to communicate with AFCI module	Restart the inverter. If the error persists, contact the distributor.
AFCI high	PV arc fault is detected	Check each PV string for correct open circuit voltage and short-circuit current. If the PV strings are in good condition, clear the alarm.
Meter com failure	Inverter fails to communicate with the meter	Check if the communication cable is connected correctly and in good working condition. Restart the inverter. If the alarm persists, contact the distributor.
Bat fault	Battery cannot charge or discharge	1. Check the battery communication cable for correct pinout on both inverter and battery end. 2. Check if an incorrect battery brand has been chosen. 3. Check if there is a fault on the battery's indicator. If there is a fault, contact the battery distributor.
Fwn mismatch	Firmware version mismatch between the microprocessors	Attempt the firmware update again following the steps in section 12.2; if the fault persists, contact distributor.
Fan stuck	Cooling fan(s) are stuck	Contact distributor.
Trip by GFCI high	Inverter detected leakage current on AC side	1. Check if there is ground fault on the grid and load side. 2. Restart the inverter. If the alarm persists, contact the distributor.
Trip by DCI high	Inverter detected high DC injection current on grid terminal	Restart the inverter. If the alarm persists, contact the distributor.
PV short circuit	Inverter detected a short circuit in PV input	1. Check whether each PV string is connected correctly. 2. Restart the inverter. If the alarm persists, contact the distributor.
GFCI module fault	GFCI module is abnormal	Restart the inverter. If the alarm persists, contact the distributor.
Bat volt high	Battery voltage too high	Check whether the battery voltage exceeds 59.9V; battery voltage should be within inverter specification.

Bat volt low	Battery voltage too low	Check whether the battery voltage is under 40V; battery voltage should be within inverter specification.
Bat open	Battery is disconnected from inverter	Check the battery breaker or fuse. Reconnect as needed.
Off-grid overload	Overload on load terminal	Check if load power on inverter LOAD terminal is within inverter specification.
Off-grid overvolt	Load voltage is too high	Verify that all loads are operating at 120V L-N or 240V L1-L2. If the alarm persists, contact distributor.
Meter reversed	Meter connection is reversed	Check if the meter communication cable is connected correctly on the inverter and meter sides.
Off-grid VDC high	High DC voltage component on load output when running off-grid	Verify that all strings are operating within PV voltage range. Restart the inverter. If the alarm persists, contact the distributor.
RSD Active	Rapid shutdown activated	Check if the RSD switch is pressed.
Para phase loss	Phase losing in parallel system	Confirm that the wiring of the inverter is correct. If the master is set to 3-phase master, the number of parallel inverters must be ≥3. (The grid input for each inverter should be connected correctly to grid L1, L2, L3.) If the master is set to 2x 208 master, the number of parallel inverters needs to be ≥2. (And the grid input of each inverter should be connected correctly to grid L1, L2, L3.)
Para no BM set	Master is not set in the parallel system	Set one of the inverters in the parallel system as the master.
Para multi-BM set	Multiple Primaries have been set in the parallel system	There are at least two inverters set as the master in the parallel system. Keep one master and set the other as slave.

16. STANDARDS AND CERTIFICATIONS

The EG4® FlexBOSS18 is ETL listed and complies with national and international standards for safety and reliability when connected to the grid.

SAFETY

- ULSTD.1741,1741SA,1741SB, 1741 PCS CRD
- AFCI NEC 2020:690.11/UL1699B
- GFCI NEC 2020:690.41(B)
- CSA 22.2 #107.1:2016 Ed. 4
- Photovoltaic Rapid Shutdown Systems (R2022) – CSA 22.2 #330:2017 Ed. 1

GRID CONNECTION

- IEEE 1547.1:2020; 1547a:2020; IEEE 1547:2018
- Hawaii Rule 14H [HECO SRD IEEE 1547.1-2020 Ed. 2]
- California Rule 21 Phase I, II, III

EMC

- FCC Part 15 Class B

OUTDOOR RATING

- NEMA 4X

17. CHANGELOG

Ver 1.1.3

- Added table of dongle FCC ID's to section 9.1

Ver 1.1.2

- Applied latest branding
- Added (>45°C derating) to operating temperature range
- Corrected integrated battery breaker rating to 250A on spec sheet, section 3
- Updated dongle information in section 9
- Added captions to all tables and figures
- Updated product images to reflect latest branding

Ver. 1.1.1

- Renamed "Max Altitude of Operation" to "Operating Altitude"
- Added QR Code for the Monitor Center Video
- Modified external RSD type to Normally Closed

Ver. 1.1.0

- Added information regarding inverter derating for higher altitude installations

Ver. 1.0.9

- Added Warning note to section 6.4 page 31

Ver. 1.0.8

- Modified dongle update steps in section 14.7
- Modified battery torque value max in battery connections section 6.4
- Updated spec sheet.
  - Added Design Topology
  - Added MPPT Voltage High Protection and asterisk
- Updated section callouts.
- Deleted most of section 8.

Ver. 1.0.7

- Added standby status to the table in section 15.2
- Added PV Protect High value to spec sheet

Ver. 1.0.6

- Updated "CT Typing" information in conjunction with UL3141 update. See Sect. 6.4.
- Created/Added sections 9 – "Power Control System", 9.1 – "Export Limiting From all Sources (PEL)", and 9.2 – "ESS Mode" to cover PCS information.
- Added additional step of setting inverter to standby before full shutdown

Ver. 1.0.5

- Modified Compliance section in Technical Specifications table

Ver. 1.0.4

- Modified max cable size on AC input/output to 2 AWG

Ver. 1.0.3

- Added an asterisk to MPPT Voltage Range line in spec sheet
- Added note after the spec sheet regarding MPPT Voltage Range asterisk

Ver. 1.0.2

- Minor formatting changes for easier readability
- Modified Note quick-part in section 6.4 for updated communication protocol information
- Modified verbiage in section 9.2 for External RSD/ESS Disconnect
- Updated section callouts to reflect document wide changes
- Updated line drawings/renders to reflect latest inverter model
- Updated spec sheet, adding row “Peak Power”
- Modified spacing requirement for above inverter
- Modified unit dimensions in spec sheet and throughout the document:
    - From 30.43 x 22.8 x 11.22 in. (773 x 579 x 285 mm)
    - To 30.43 x 22.28 x 11.22 in. (773 x 566 x 285 mm)
- Update verbiage to reflect spacing requirements
- Modified several tables throughout the document for better readability
- Modified Start-Up Voltage from 200 VDC to 100VDC
- Modified load output minimum voltage from 120VDC to >140VDC

Ver. 1.0.1

- Added French safety section
- Updated spec sheet
    - Added open loop response time
    - Added time to steady state
    - Modified dimensions

Ver. 1.0

- Published

NOTES

EG4

ELECTRONICS

support@eg4electronics.com
(903) 609-1988
www.eg4electronics.com