LITHIUM BATTERY

MNPowerflo 16

USER MANUAL

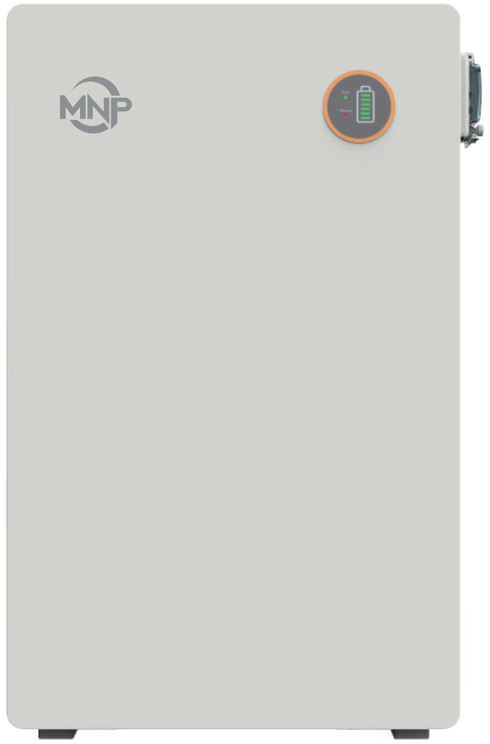

CONTACT US

support@midnitepower.com
www.midnitepower.com

© 2025 MidNite Power Inc. ALL RIGHTS RESERVED.
VERSION V1.1.0-beta| CONTENT SUBJECT TO CHANGE WITHOUT NOTICE.
MODEL #:MNPowerflo 16

Intertek

TABLE OF CONTENTS

1. TECHNICAL SPECIFICATIONS SHEET....2
2. ABBREVIATIONS 3
3. SAFETY....4
   3.1 SAFETY INSTRUCTIONS....4
   3.2 IMPORTANT SAFETY NOTIFICATIONS....4
4. BRIEF INTRODUCTION 6
   4.1 PRODUCT DESCRIPTION 6
5. PACKING LIST....7
6. LOCATION SELECTION AND INSTALLATION 8
   6.1 MNPowerflo 16 INSTALLATION 9
7. BATTERY WIRING 13
   7.1 BATTERY PARALLELING COM MUNICATION WIRING GUIDE 13
   7.2 BATTERY WIRING DIAGRAM AND GUIDE 14
   7.3 BPARALLEL SYSTEM WIRING DIAGRAMS....15
   7.4 POWER ON SEQUENCE 18
   7.5 POWER OFF SEQUENCE 18
   7.6 BATTERY CHARGING 19
8. TROUBLESHOOTING, MAINTENANCE & DISPOSAL 20
   8.1 INTRODUCTION TO THE BMS 20
   8.2 BMS PROTECTION....20
   8.3 TROUBLESHOOTING....21
   8.4 BATTERY DISPOSAL 23
9. MNPower 15 YEARS LIMITED WARRANTY....23
   9.1 WARRANTY EXCLUSIONS 23
10. STORAGE 24

Symbols on labels, manuals, and products

	Do not reverse the Positive and Negitive connection. N'inversez pas la connexion positive et négative.
	Do not place near open flame. Ne pas placer près d'une flamme nue.
	Keep out of reach of children and pets. Ne placez pas l'appareil dans la zone de contact des enfants et des animaux domestiques.
	Warning electric shock. Avertissement de choc électrique.
	Fire Warning. Do not place near flammable material. Avertissement d'incendie. Ne placez pas à proximité de matériaux inflammables.
	Read the product and operation manual before operating the battery system! Lisez le produit et le manuel d'utilisation avant d'utiliser le système de batterie!
	Grounding. Système de mise à la terre.
	Recycle label.
	Label for Waste Electrical and Electronic Equipment (WEEE) Directive (2012/19/EU)

1. TECHNICAL SPECIFICATIONS SHEET

Product Name	MNPowerflo 16
Electrical Characteristics	
Nominal Voltage	51.2V
Nominal Capacity	314Ah
Energy	16,076Wh
Battery Chemistry	Lithium Iron Phosphate (LFP)
Cycle Life	8,000 cycles @77°F(25°C) 0.5C/0.5C
Operating Voltage	46.4~57.6V
Communication Interfaces	CAN/RS485/RS232
Scalable	Up to 20 units
Charge&Discharge	
Nominal Charging Current	160A
Nominal Discharging Current	160A
Max. Discharging Current	210A
Environmental	
Environment	Outdoor, Indoor
Charging Temperature	-4°F to 122°F (-20°C to 50°C)*
Discharging Temperature	-4°F to 122°F (-20°C to 50°C)
Storage Temperature	14°F to 113°F (-10°C to 45°C)
Altitude	Maximum 9,843 ft (3,000 m)
Cooling Method	Natural Convection
IP Rating	IP65
Mechanical	
Dimension(L x W x D)	31.50 x19.69x8.94in(800*500*227mm)
Weight	284lbs(128.9kg)
Installation	Wall mount or Floor mount

* When the ambient temperature is below 32°F (0°C), the internal heating pads start to operate. The battery begins charging when the cell temperature is between 32°F and 122°F (0°C and 50°C).

2. ABBREVIATIONS

A – Amp(s)
AC – Alternating Current
Ah – Amp hour(s)
AHJ – Authority Having Jurisdiction
ANSI – American National Standards Institute
AWG – American Wire Gauge
BAT – Battery
BMS – Battery Management System
COM – Communication
CT – Current Transformer
DC – Direct Current
DOD – Depth of Discharge
EG – Equipment Ground
EGS – Equipment Grounding System
EPS – Emergency Power System
ESS – Energy Storage System
E-Stop NO – Emergency Stop Normally Open
FCC – Federal Communication Commission
GE – Grounding Electrode
GEC – Grounding Electrode Conductor
GEN – Generator
GES – Grounding Electrode System
GFCI – Ground Fault Circuit Interrupter
GFDI – Ground Fault Detector/Interrupter
IEEE – Institute of Electrical and Electronic Engineers
Imp – Maximum Power Point Current
In. lbs. – Inch Pounds
IP – Ingress Protection
Isc – Short-Circuit Current
kW – Kilowatt
kWh – Kilowatt-hour
L1 – Line 1
L2 – Line 2
LFP – Lithium Iron Phosphate or LiFePO4
mm – Millimeter(s)
MPPT – Maximum Power Point Tracker
ms – Millisecond(s)
mV – Millivolt(s)
NEC – National Electrical Code
NEMA – National Electrical Manufacturers Association
NFPA – National Fire Prevention Association
Nm – Newton Meters
NOCT – Normal Operating Cell Temperature
PC – Personal Computer
PCB – Printed Circuit Board
PE – Protective Earth (G or Ground)
PPE – Personal Protective Equipment
PV – Photovoltaic
RSD – Rapid Shut Down
SCC – Standards Council of Canada
SOC – State of Charge
STC – Standard Testing Conditions
UL – Underwriters Laboratories
UPS – Uninterrupted Power Supply
V – Volt(s)
VMP – Voltage Maximum Power
VOC – Open-Circuit Voltage

3. SAFETY

3.1 SAFETY INSTRUCTIONS

International safety regulations have been strictly observed in the design and testing of the battery. Before beginning any work, carefully read all safety instructions, and always observe them when working on or with the battery. The installation must follow all applicable national or local standards and regulations.

Incorrect installation may cause:

- injury or death to the installer, operator or third party
- damage to the battery or other attached equipment

3.2 IMPORTANT SAFETY NOTIFICATIONS

DANGER! Hazardous Voltage Circuits!
AVERTISSEMENT! Circuits à tension élevée!

There are various safety concerns that must be carefully observed before, during, and after the installation, as well as during future operation and maintenance. The following are important safety notifications for the installer and any end users of this product under normal operating conditions.

1. Beware of high PV voltage. Please install an external DC disconnect switch or breaker and ensure it is in the “off” or “open” position before installing or working on the battery. Use a voltmeter to confirm there is no DC voltage present to avoid electric shock.
2. Beware of high grid voltage. Please ensure the AC switch and/or AC breaker are in the “off” or “open” position before installing or working on the battery. Use a voltmeter to confirm there is no voltage present to avoid electric shock.
3. Beware of high battery current. Please ensure that the battery module breakers and/or on/off switches are in the “open” or “off” position before installing or working on the battery. Use a voltmeter to confirm there is no DC voltage present to avoid electric shock.
4. Do not open the battery while it is operating to avoid electric shock and damage from live voltage and current within the system.
5. Do not make any connections or disconnections (PV, battery, grid, communication, etc.) while the battery is operating.
6. An installer should use personal protective equipment (PPE).
7. Before installing, operating, or maintaining the system, it is important to inspect all existing wiring to ensure that it meets the appropriate specifications and conditions for use.
8. Ensure that the PV, battery, and grid connections to the inverter are correct to prevent damage or injuries caused by improper installation.

DISCLAIMER
MidNite Power Inc. reserves the right to modify the content herein at any time without prior notice.
For the latest versions of our manuals and specification sheets, please visit www.midnitepower.com

WARNING : To reduce the risk of injury, read all instructions

All work on this product (system design, installation, operation, setting, configuration, and maintenance) must be carried out by qualified personnel. To reduce the risk of electric shock, do not perform any servicing other than those specified in the operating instructions unless qualified to do so.

1. Read all instructions before installing. For electrical work, follow all local and national wiring standards, regulations, and these installation instructions.
2. Make sure the battery is properly grounded. All wiring should be in accordance with the National Electrical Code (NEC), ANSI/NFPA 70.
3. The battery and system can inter-connect with the utility grid only if the utility provider permits. Consult with the local AHJ before installing this product for any additional regulations and requirements for the area.
4. All warning labels and nameplates on this battery should be clearly visible and must not be removed or covered.
5. The installer should consider the safety of users when choosing the battery ’s correct position and location as specified in this manual.
6. Please keep children away from touching or misusing the battery and relevant systems.
7. Beware! The battery and some parts of the system can be hot when in use. Use Caution if you touch the battery ’s surface or parts when they are operating.

During the installation and use of this equipment, users must follow the safety guidelines below to ensure the stability and safety of the server rack batteries installation:

1.This battery is classified as heavy equipment. Appropriate safety measures must be taken during handling and installation. It is recommended to use proper handling tools and equipment, and the operation should be performed by experienced professionals. Failure to use suitable tools or methods during handling may result in personal injury or equipment damage.

2.Wall Installation: If you choose to install the battery on the wall, ensure that the wall structure is strong enough to support the weight and vibrations of the battery. A professional should perform a wall strength assessment before installation to ensure it meets the installation requirements.

3.Ground Installation: If the battery is installed on the ground, ensure that the surface is level and sturdy, avoiding any instability or tilting due to an uneven surface. The ground must have sufficient load-bearing capacity to prevent damage caused by the weight of the equipment.

4.Regularly check the stability of the batteries and their supports to ensure that all connection components are tight.

5.Do not stack heavy objects on the batteries or perform any other operations that may affect their stability.

6.If any tilting, loose brackets, or instability of the battery is detected, please stop using it immediately and conduct an inspection.

The company is not responsible for any damage or personal injury caused by failure to adhere to the above safety guidelines.

4. BRIEF INTRODUCTION

Battery Features

- IP65 all-weather rated, integrated self - heating during low ambient temperatures.
- Active balancing of cells enhancing the battery consistency and the lifespan up to 20 years with over 8000 cycles (at an operating temperature of 77°F [25°C]).
- Built - in intelligent BMS with battery voltage, current, temperature, and health management to reduce electrical risks and overheating.
- Communicate with inverter using CAN or RS485. Firmware update using RS485
- High-reliability 250A DC connector.
- Stable, reliable, and maintenance free battery pack.
- Comprehensive safety UL1973, UL9540A, UL9540 on cell and module level with enhanced onboard fire-extinguishing modules.

4.1 PRODUCT DESCRIPTION

The MNPowerflo 16 batteries are ideal for low- voltage residential outdoor energy storage system (ESS) applications. These batteries use lithium iron phosphate cells with the highest safety performance and an intelligent Battery Management System (BMS) that can monitor and record the voltage of each cell, along with the current, voltage, and temperature of the module in real- time. The BMS also contains an active balance function and an advanced battery control method, both of which improve the performance of the battery pack. For enhanced security, the battery is equipped with onboard fire extinguishing devices. With a design life of more than 20 years, the Wall Mount is designed for over 8000 cycles (at an operating temperature of 77°F [25°C]).

5. PACKING LIST

The items listed below are included with the purchase:

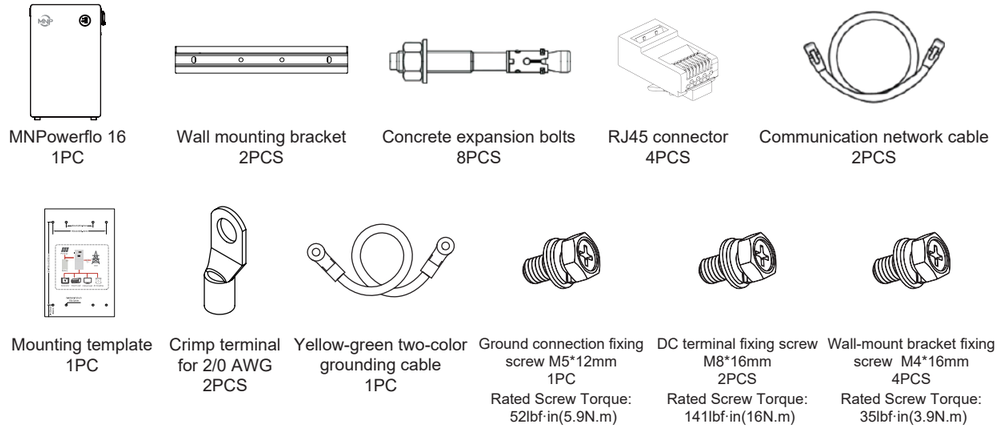

Battery Overview

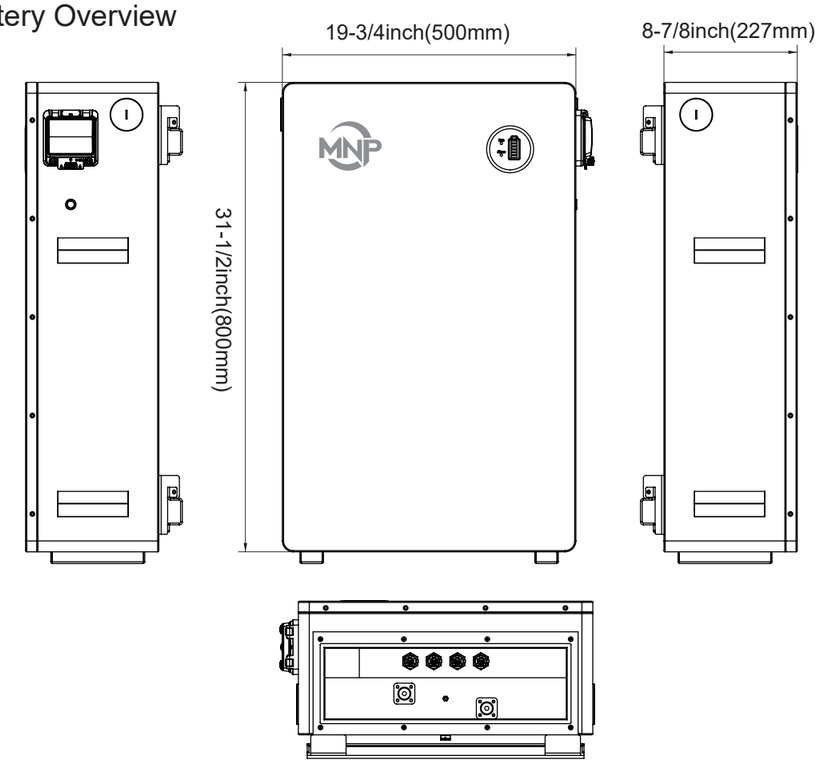

Figure 1-Battery Cross-Sectional View

DANGER:When installing or removing battery, ensure battery is in the off position, and use a voltmeter to confirm there is no voltage present. This will prevent users from encountering live (powered) terminals by accident.
Failure to do so can result in severe injury and/or death.

6. LOCATION SELECTION AND INSTALLATION

WARNING

- Do not stack MNPowerflo 16 batteries in series! The BMS and internal components are not designed to handle this setup, which could cause the modules to fail.
- The WallMount battery is heavy. Use a lift or other equipment to lift and carry the unit.
- The battery can be installed against a flat wall, but the weight of the battery should not be fully supported by the wall. To help with this requirement, the battery comes with pre-installed feet that should be used to allow some of the weight of the battery to rest on the ground.
- When installing on a wall, the wall must be made of non-combustible material. If this is not possible, then the unit MUST have a minimum of 2 in. (50.8mm) of clearance from the wall to prevent heat transfer to the wall surface. All materials within the 2 in clearance, must be a non combustible material.
- If installing on flat ground, ensure there is proper drainage surrounding the battery to prevent damage from flooding. If installing against a wall, ensure at least a 12 in. gap on each side of the unit for adequate airflow and operations.
- Always mount the battery in an upright position.

- Ensure at least 12in between multiple WallMount batteries and other devices.
- Please follow NEC and other local codes while installing the product.

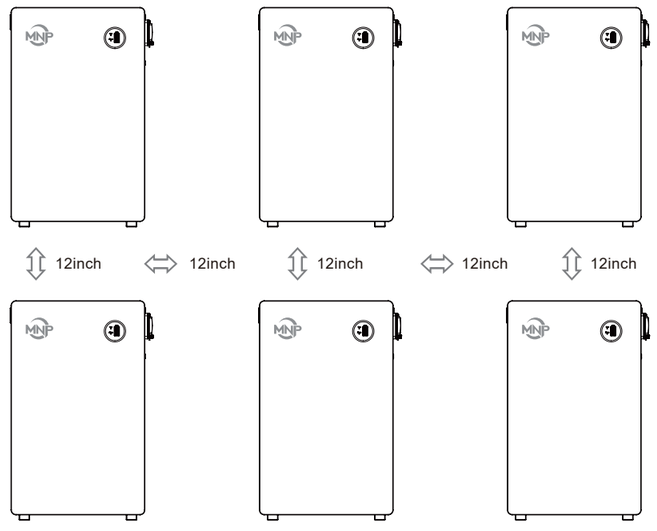

Figure 2 – Clearance Diagram

6.1 MNPowerflo 16 INSTALLATION

Wiring compartment is at the top of the battery. Please remove the top cover before installation.

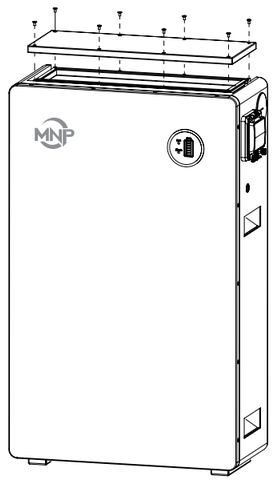

STEP 1

Use the included 1:1 scale paper mounting template on the wall to help determine the bracket drilling positions.

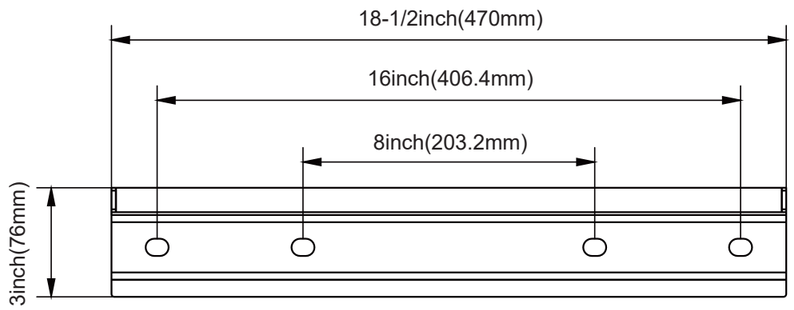

STEP 2

Secure the mounting bracket.

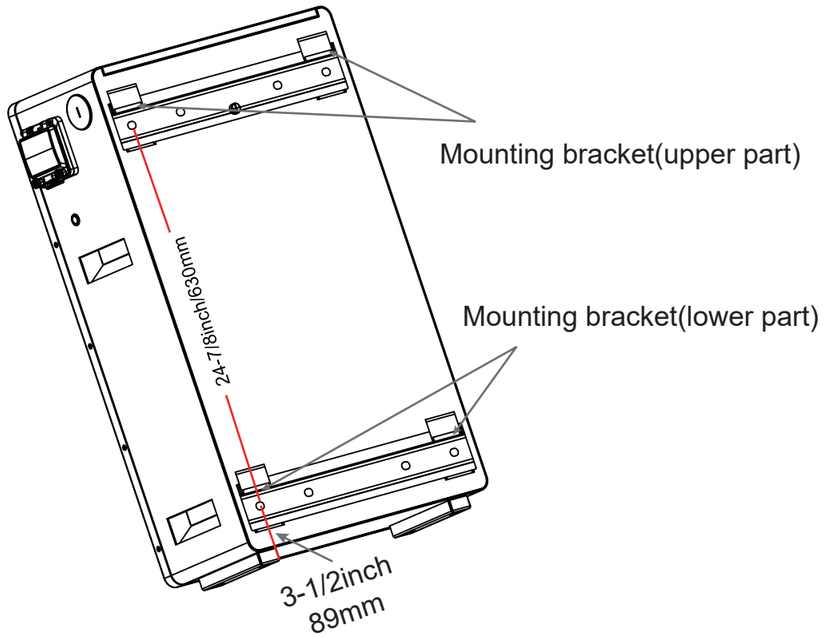

STEP 3

Hang the MNPowerflo 16 battery on the wall mounting bracket and secure it tightly.

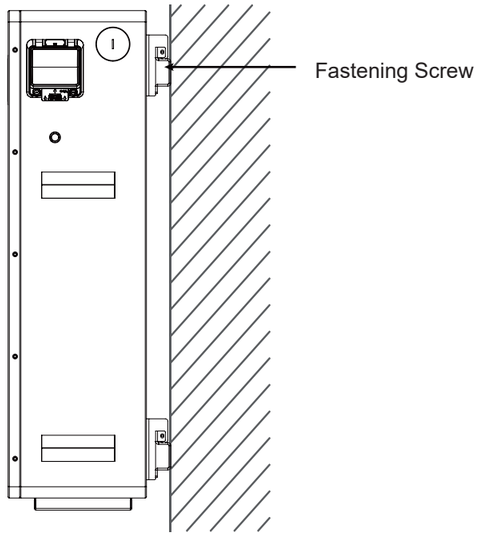

STEP 4

Connect to the ground.

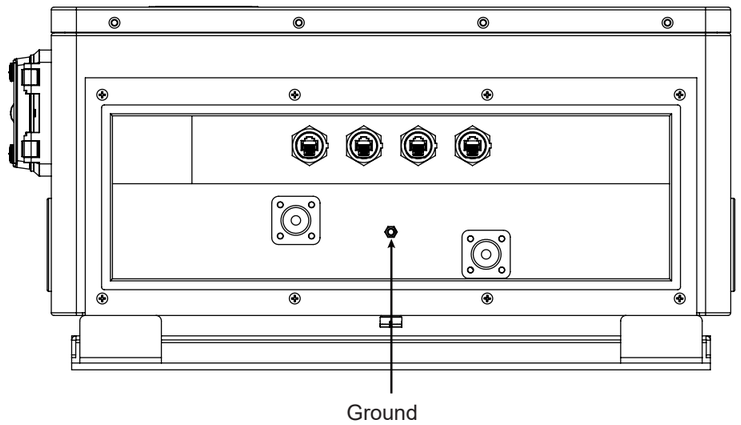

STEP 5

Connect the power cable and communication cable, note that the power cable needs to be securely fixed.

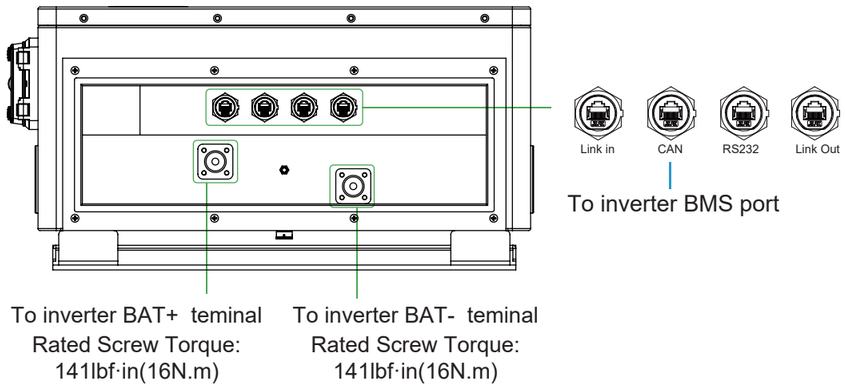

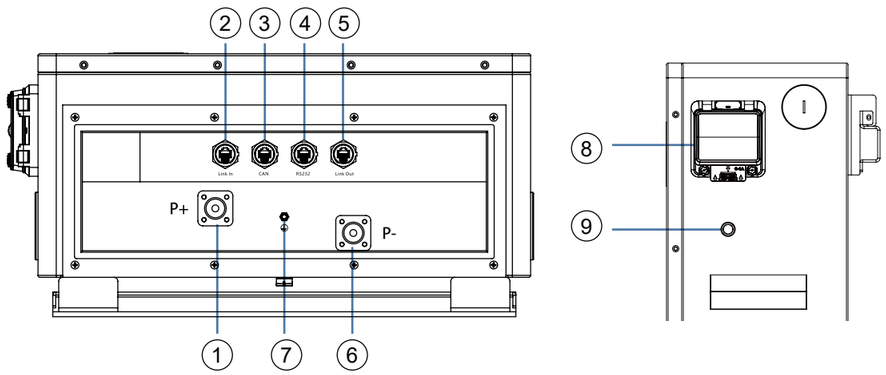

NO	ITEM	DESCRIPTION	REMARKS
1	Positive terminal	M8 bolt (x1)	Rated Screw Torque: 141lbf·in(16N.m)
2	LINK-IN	Parallel battery communication port	Pin 2-485A / Pin 3-485B Pin 4-UP IN+ / Pin 5-UP IN- Pin 6-485B / Pin 7-485A / Pin 8-GND
3	CAN port	CAN communication interface	Pin 4-CAN_H / Pin 5-CAN_L
4	RS232 port	RS232 communication interface	Pin 6-RS232_RX / Pin 7-RS232_TX / Pin 8-GND
5	LINK-OUT	Parallel battery communication port	Pin 2-485A / Pin 3-485B Pin 4-UP OP+ / Pin 5-UP OP- Pin 6-485B / Pin 7-485A / Pin 8-GND
6	Negative terminal	M8 bolt (x1)	Rated Screw Torque: 141lbf·in(16N.m)
7	Ground screw	Provides safe route for grounding	Rated Screw Torque:35lbf·in(3.9N.m)
8	Circuit breaker	Shuts down power supply	–
9	POWER button	Turn on/off the BMS	–

7. BATTERY WIRING

WARNING

Be sure the battery packs are powered "OFF" before making/removing any connections.

Use two 2/0 Awg (70mm) outdoor rated positive and negative battery cables (not included) with Hydraulic crimped ring terminals and heat shrink insulation.

When paralleling batteries, the battries can be terminated in a combiner box or bussbar rated for the number of inverters being installed.

When paralleling batteries, use a communication cable to connect the master battery to slave batteries for battery-to-battery communication. This cable is a standard RJ45 Cat 5 computer cable.

7.1 BATTERY PARALLELING COMMUNICATION WIRING GUIDE

1. Ensure all battery breakers and BMS are OFF.
2. Set up communication between the batteries via the "Battery - Comm" ports of each battery. Use the paralleling kit communication cable to daisy chain all paralleled batteries in the bank together. See diagram below for example.

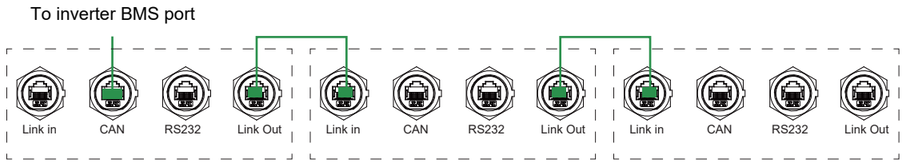

3. If the communication of one battery is connected to the inverter, then that battery is the master unit.
4. Install battery paralleling cables between batteries. Refer to Section 8.2 Battery Cable Connections for battery cable connection diagram examples.
5. Once all cable connections are completed and the system is ready to be commissioned, power on each battery breaker and BMS ON/OFF switch one at a time beginning with the master battery.

   Battery automatically assigns addresses. No dip switch programing required.

7.2 BATTERY WIRING DIAGRAM AND GUIDE

The following battery wiring diagrams are examples using the external busbars to parallel the batteries together and connect the inverter(s) to the batteries.

Systems with more batteries than these configurations require the use of an external fused positive busbar and an unfused negative busbar rated at a minimum of 210A per battery. Each fuse should be a maximum of 250 A. Alternatively, larger systems could rely on the MN15-12KW-AIO ability to draw from different battery packs while still paralleling inverters rather than utilizing external busbars.

we recommend a ratio of 2 batteries per pack controlled by each MN15-12KW-AIO inverter. Separating packs is only recommended if each pack's average SOC is monitored over time and does not diverge by more than 10%. Refer to NEC code and the local AHJ for exact requirements.

If installing one MN15-12KW-AIO inverter and one MNPowerFlo 16 battery, you must use a pair of 4/0 copper battery cables if not using a bussbar.

NOTE:In the following diagrams, units are spaced 12 in. apart. Local regulations may require a larger minimum battery spacing. Check with the local AHJ for these requirements.

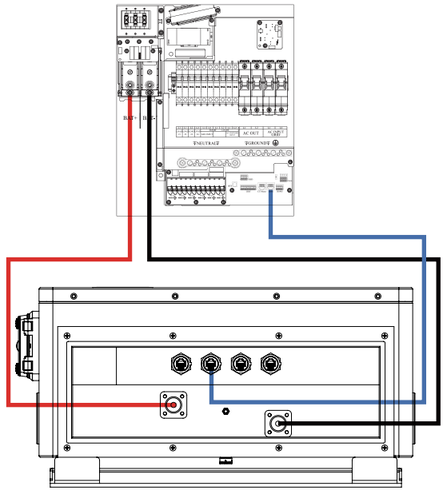

Figure 3 – (1) MN15-12KW-AIO (1) MNPowerflo 16

Single battery install must use 4/0 AWG Copper Battery cable

Pro Tip:One MN15-12KW-AIO MNPowerflo 16 and a minimum of 2 WallMount units is the recommended configuration to maximize the system's functionality.

7.3 Parallel System Wiring Diagrams

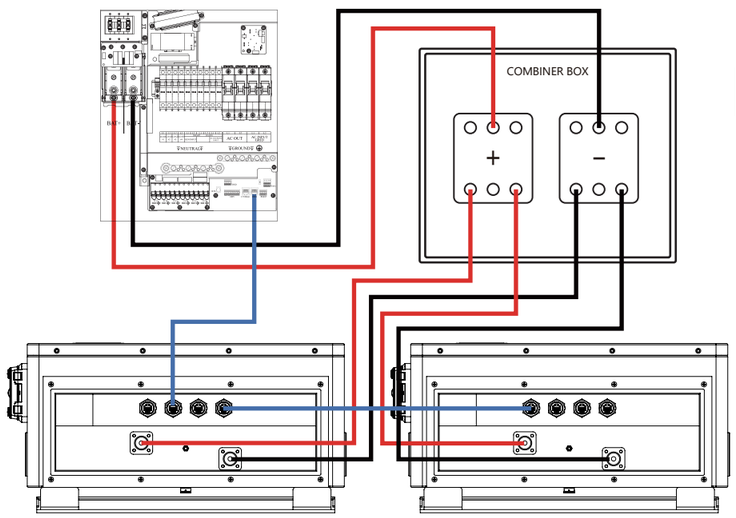

Figure 4 – (1) MN15-12KW-AIO (2) MNPowerflo 16

Note: Some configurations require additional wiring/connectors to achieve the example layouts. Inverter to inverter paralleling cables are not shown in the following diagrams. Other configurations can be achieved by using external busbar s. Please seek the guidance of an electrician or qualified person for optional system layout.

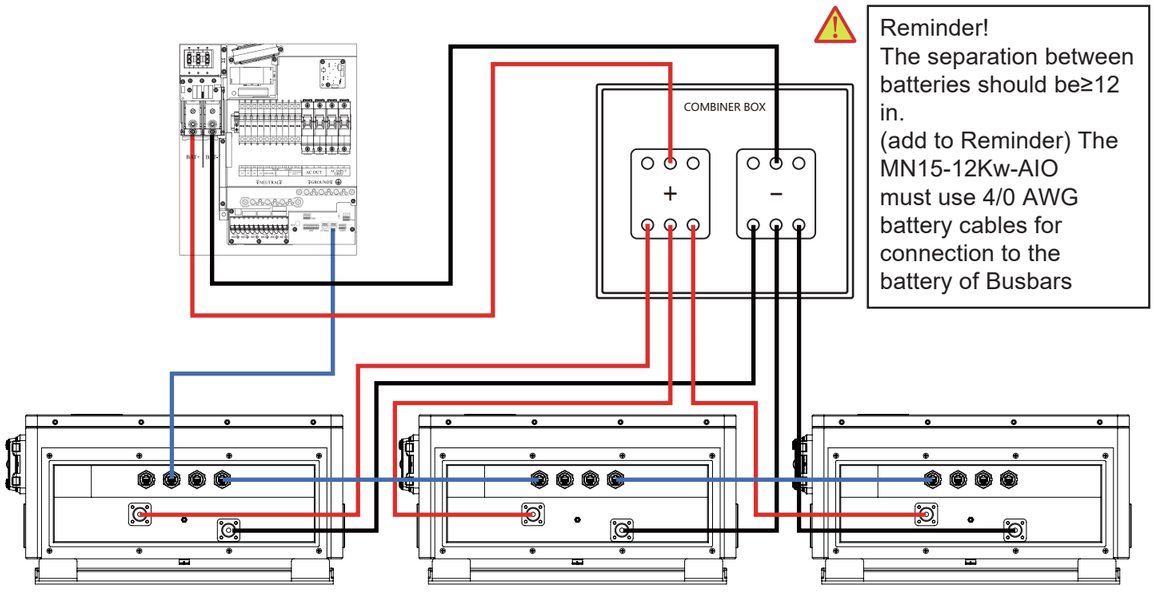

Reminder!
The separation between batteries should be≥12 in.
(add to Reminder) The MN15-12Kw-AIO must use 4/0 AWG battery cables for connection to the battery of Busbars

Figure 5 – (1) MN15-12KW-AIO (3) MNPowerflo 16

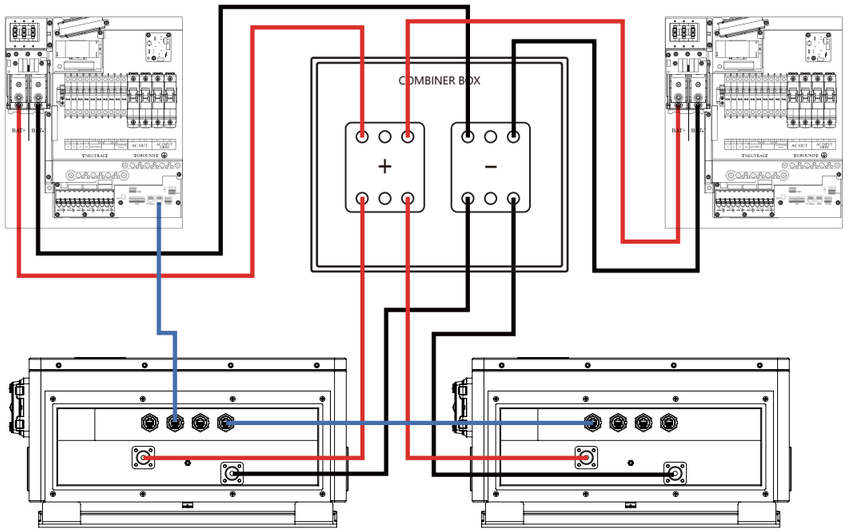

Figure 6 – (2) MN15-12KW-AIO (2) MNPowerflo 16

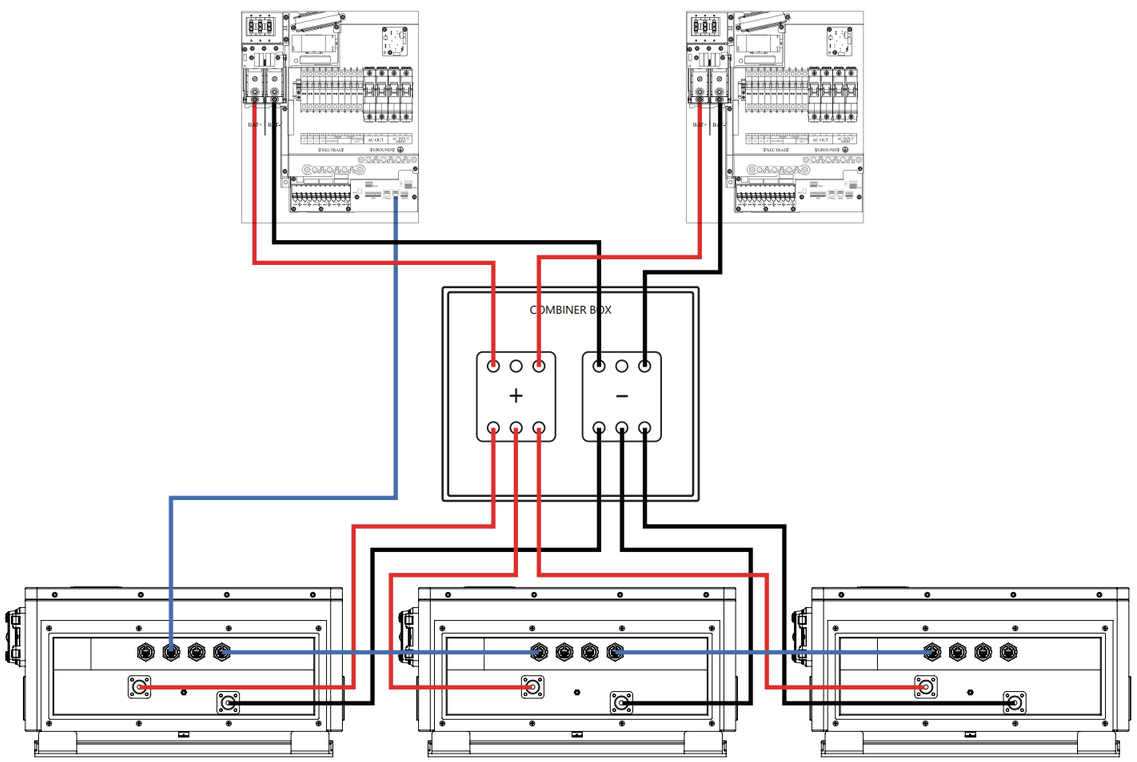

Figure 7 – (2) MN15-12KW-AIO (3) MNPowerflo 16

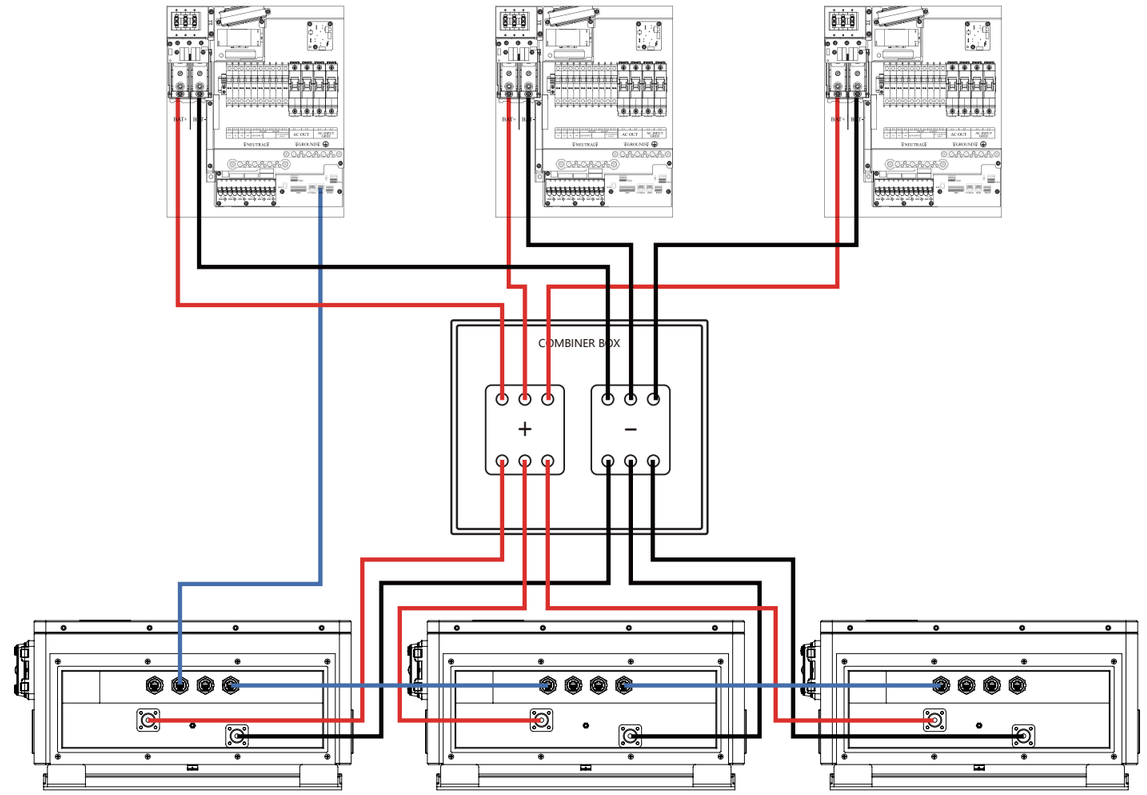

Figure 8 – (3) MN15-12KW-AIO (3) MNPowerflo 16

7.4 STARTUP PROCEDURE

Battery Side:

1. Ensure the battery is properly connected to the inverter with both power cables and communication cables securely in place.
2. Switch on the circuit breaker on the battery side.
3. Press and hold the battery's "POWER" button for 3 seconds, and confirm that the RUN indicator is flashing and the SOC indicator is lit normally.

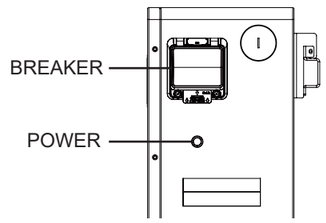

Inverter Side:

4. Switch on the circuit breaker at the inverter's battery input.
5. Start the inverter by pressing and holding the power button on the inverter for 3 seconds.
6. Switch on the circuit breaker on the inverter's load side.

Startup Status Display Instructions

1. Single Battery Pack Startup: Press and hold the "POWER" button for 3 seconds. The SOC, RUN, and ALM indicators will all light up and flash 3 times. After that, the SOC indicator will remain on, and the RUN indicator will flash, indicating that the startup is complete.
2. Parallel Battery Pack Startup: First, check if the communication connection cables are properly installed. Then, press and hold the "POWER" button on the master unit for 3 seconds. The SOC, RUN, and ALM indicators on both the master and slave units will all light up and flash 3 times. Afterward, the master unit's SOC indicator will remain on, and the RUN indicator will flash. The slave unit will only have the RUN indicator flashing, indicating that the master-slave battery pack startup is complete.

7.5 SHUTDOWN PROCEDURE

Inverter Side:

1. Turn off the circuit breaker on the inverter's load side.
2. Shut down the inverter by pressing and holding the power button on the inverter for 3 seconds.
3. Turn off the circuit breaker at the inverter's battery input.

Battery Side:

4. Turn off the circuit breaker on the battery side.
5. Press and hold the battery's "POWER" button for 3 seconds to shut down the battery, and ensure that the SOC, RUN, and ALM indicators are all turned off.

Shutdown Status Display Instructions

1. Single Battery Pack Shutdown: Press and hold the "POWER" button for 3 seconds. The SOC, RUN, and ALM indicators will light up one by one, then all will turn off, indicating that the shutdown is complete.
2. Parallel Battery Pack Shutdown: Press and hold the "POWER" button on the master unit for 3 seconds. The SOC, RUN, and ALM indicators on the master unit will light up one by one, then all will turn off. The RUN indicator on the slave unit will turn off, indicating that the master-slave battery pack shutdown is complete.

Notes

● Maintain Safety: When operating electrical equipment, Use appropriate safety measures, such as wearing insulated gloves and ensuring hands are dry.

● Regular Maintenance: Check and maintain the energy storage system to ensure its long-term stable operation.

7.6 BATTERY CHARGING

Charge cycle

Ensure the proper settings are set on the charge controller and/or inverter being used to avoid overcharging or damaging the module. (Refer to Section 1: Technical Specifications Table for a full list of charging/discharging parameters.)

IMPORTANT

It is normal for LFP batteries with internal BMS and that are wired in parallel to demonstrate a variety of SOC readings during charge or discharge cycles.
bold txt. This is not cause for concern or indication that the module is providing less than the maximum capacity. This is caused by even slight variations in wiring resistance to each battery, internal resistance, temperature differences, and even variations in each cell. Even a slight variation causes one battery to take more of the load or charge for a short time. Over the duration of the discharge or charge cycle, this will balance out with the lagging battery then taking the load or charge at the other end of the cycle resulting in recovering the full listed kWh capacity of the pack. The voltage differences created as batteries diverge in SOC will eventually cause them to converge at some point in the cycle.

Recommended Charge Current Settings for Paralleled Batteries on Paralleled MN15-12KW-AIO

# of MN15-12KW-AIO	Rec. Max. Charge Current (230A per inverter)	(1) Battery Inverter Setting – Amps per Battery	(2) Batteries Inverter Setting – Amps per Battery	(3) Batteries Inverter Setting – Amps per Battery	(4) Batteries Inverter Setting – Amps per Battery
1	210A	160-160A	210-160A	210-70A	210-52A
2	420A	80-160A	160-160A	210-140A	210-105A
3	630A	53-160A	107-160A	160-160A	210-160A

Please note that the maximum allowed charging current for a single battery is 210A, the internal thermal sensors will throttle the charge current to what the BMS deems necessary to prevent overheating.

8. TROUBLESHOOTING, MAINTENANCE & DISPOSAL

8.1 INTRODUCTION TO THE BMS

The BMS (Battery Management System) is intended to safeguard the battery and battery cells against a variety of situations that could damage or destroy system components. This protection also aids in keeping the battery and battery cells operational for a greater number of life cycles. Each MNPowerflo 16 battery is specifically configured to ensure peak performance and operation with any inverter system.

8.2 BMS PROTECTION

PCB temperature protection

The BMS will ensure that the Printed Circuit Board (PCB) does not overheat. This is the component that houses most of the “brains” of the battery. This feature will turn off the battery if it begins to overheat.

Cell balance protection

Cell balance ensures that each cell is within a specific voltage range of each other. Cell balance is crucial for ensuring that the battery is operating properly for its lifespan. This is always done Automatically.

Environmental temperature protection

It may be dangerous to attempt using the battery in extreme heat or cold. Continued operation in these conditions may result in permanent damage to the battery module and its components. To prevent this, the BMS is designed to measure the temperature while charging/discharging and will shut down the battery to prevent damage.

Voltage protection

The BMS is designed to continuously monitor the voltage of each individual cell and ensure that they are not over/undercharged.

Current protection

The BMS is designed to constantly monitor the charge/discharge amperage and has built-in safeguards against exceeding specific parameters. These include built-in timers that shut off quickly in the event of short circuits, extremely high amperage and delayed shut down for amperage that is only slightly above the maximum capacity.

8.3 TROUBLESHOOTING

Alarm Description and Troubleshooting.

When the Alarm light on the battery control panel is on, it means that the battery has given an alarm or has been protected from potential damage.

FRONT PANEL INDICATOR LIGHTS

Run/Alarm LIGHTS

The MNPowerflo16 battery features 2 LED status indicator lights on the front panel of the unit. Their functions are listed below:

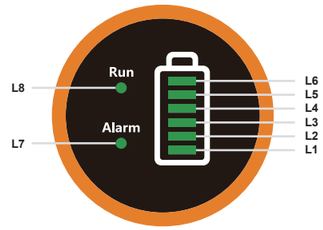

Alarm-The Alarm light indicates a static, red color and powers on when a fault occurs. Please refer to the table below for more information on specific faults and required actions.

Run-The Run light will indicate a solid, green color when the battery is in an idle state. When the battery is either charging or discharging, the light will indicate a blinking, green color.

Light Description	Indication	Color	Indication Description
ALM	Static	Red	A fault has occurred
RUN	Static	Green	Battery is in the idle state
	Blinking	Green	Battery is discharging
	Light	Green	charging

SOC INDICATOR LIGHTS

The battery also features an LED capacity gauge to indicate the SOC (state of charge). The table below provides the detailed logic of the LED lights.

Status		LED status							
Battery Level Indicator		L8	L7	L6	L5	L4	L3	L2	L1
Battery SOC Levels (%)	0～17%	Light	OFF	OFF	OFF	OFF	OFF	OFF	Blinking(Charging) /Light(Other)
	18～33%			OFF	OFF	OFF	OFF	Blinking(Charging) /Light(Other)	Light
	34～50%			OFF	OFF	OFF	Blinking(Charging) /Light(Other)	Light	Light
	51～66%			OFF	OFF	Blinking(Charging) /Light(Other)	Light	Light	Light
	67～83%			OFF	Blinking(Charging) /Light(Other)	Light	Light	Light	Light
	84～100%			Blinking(Charging) /Light(Other)	Light	Light	Light	Light	Light
	Full Charged			Light	Light	Light	Light	Light	Light

Note: In a system with multiple batteries connected in parallel, only the power gauge of the master battery will be activated. The master battery's power gauge represents the SOC of the entire battery system, and the gauges of the other batteries will not be activated.
If the battery is not stacked properly, the battery display will be activated. Please check your cable connections and placement again.

NOTE: If any fault from the table below persists, please contact the distributor or MNP for additional troubleshooting.

FAULT	ANALYSIS
Overvoltage Protection	RUN light is constantly on.
Undervoltage Protection	5-minute delay before entering sleep mode.
Overtemperature Protection	ALM light is constantly on.
Low-Temperature Protection	ALM light is constantly on.
MOS Overtemperature Protection	ALM light is constantly on.
Ambient High Temperature	ALM light is constantly on.
Ambient Low Temperature	ALM light is constantly on.
Short Circuit Protection	ALM light is constantly on.
Charging	RUN light is constantly on, SOC light is flashing.
Discharging	RUN light is flashing, SOC light is constantly on.
Standby	RUN light is flashing, SOC light is constantly on.

8.4 BATTERY DISPOSAL

The MNPowerflo 16 battery is designed to last for more than 20 years when used correctly. We have worked tirelessly to ensure that our batteries will maintain a charge after thousands of cycles. However, when it does come time to retire the battery, there are a few things to consider.
Lithium iron phosphate batteries are considered a hazardous material and should not be disposed of by simply placing them in the trash. There are several websites and organizations that will accept this battery to recycle at little to no cost to the user. At MidNite Power Inc. we understand that we are working with customers across the United States and the world. Our recommendation is to go online and search the term “Lithium Battery Disposal Near Me.” There will likely be an assortment of organizations that can safely dispose of LFP batteries.
We recommend calling ahead of time to ensure that the location is still open and accepting material.
If users are unable to locate a disposal location safely, MidNite Power Inc. is here to help. Before dumping the battery or disposing of it incorrectly, please contact our customer service team for assistance.

9. MNPower 15 YEARS LIMITED WARRANTY

The warranty must be registered within the first year of purchase to remain valid. If users choose not to register the product, the warranty may be invalidated. This limited warranty is to the original purchaser of the product and is not transferable to any other person or entity. All BMS and cell exchanges are covered throughout the warranty period. If a full replacement warranty is needed the warranty is prorated 1/14th per year after the first year at the current retail pricing.

9.1 WARRANTY EXCLUSIONS

Under this limited warranty, MidNite Power Inc. has no obligation to the product if it is subject to the following conditions, including but not limited to:

- Damages incurred during installation or removal
- Damages caused during mishandling of product
- Inappropriate environmental exposure
- Damages caused by improper maintenance
- Unauthorized tampering, altering, and/or disassembly of product
- Using the product for purposes other than those intended by the manufacturer
- Lightning, Fire, Flood, or Acts of God
- Any product whose serial number has been altered, defaced, or removed

The equipment sold by MidNite Power Inc. is designed to be installed only by licensed, trained, and insured solar electrical installation professionals. We strongly advise customers to seek the assistance of such a professional to implement these products, and we make no warranty of the purchaser’s safety, success of equipment implementation, or compliance with local codes and regulations.

MidNite Power Inc. disclaims all additional warranties, expressed or implied, including but not limited to, any implied warranty with respect to the accuracy or completeness of the information they disseminate and/or fitness of the materials sold for a parti cular purpose. No warranty may be created or extended by sales or promotional materials on these items. Each party hereby irrevocably waives its rights to trial by jury in any action or proceeding arising out of this agreement or the transactions relating to its subject matter. All installation advice provided by MidNite Power Inc. before, during, or after purchase of solar equipment is purely for the purpose of general concept education and must not replace the expertise of a licensed and trained solar specialist. The customer agrees to full indemnification for MidNite Power Inc. henceforth from any legal recourse relating to and arising out of losses, direct or consequential, from the installation of the products purchased by the customer more than the value of the equipment purchase price.

10.STORAGE

Please follow these instructions for the safe storage of the unit to maintain the longevity of the battery, if choos ing not to install the product immediately after purchasing or unpacking the box.

There are a few steps that can be taken to ensure that batteries are stored safely and in a state that will ensure they are not damaged during storage. The steps are detailed below.

Battery State

The state of the battery when placed into storage will affect how long it can be stored as well as the battery's condition when it is brought out of storage. MidNite Power Inc. recommends that each battery is brought to a 100% SOC (state of charge) before placing it in storage. Lithium batteries will lose a certain percentage of their total charge while in storage, depending on how long they are stored and the conditions they are stored in. We recommend recharging the batteries after 8–9 months in prolonged storage.

Environmental Factors

The environment the battery is stored in can greatly affect the health of the battery. For best results, the temperature should range between 33°F and 90°F (0.6°C and 32°C). Mount the battery in a location where it is not exposed to direct rain, standing water and ensure the battery is mounted on non-combustible material. Keep the battery away from direct sunlight. Store the batteries away from combustible materials.

Notes