SERVER RACK BATTERY

MNPowerflo 5

USER MANUAL

©2024 MIDNITE SOLAR INC. ALL RIGHTS RESERVED.
VERSION V1.3.0-BETA | CONTENT SUBJECT TO CHANGE WITHOUT NOTICE.

TABLE OF CONTENTS

1. ABBREVIATIONS 1
2. TECHNICAL SPECIFICATIONS TABLE 2
3. SAFETY 3
   3.1 SAFETY INSTRUCTION 3
   3.2 IMPORTANT SAFETY NOTIFICATIONS 3
4. BRIEF INTRODUCTION 5
5. SYSTEM OVERVIEW 5
   5.1 BATTERY DIAGRAM 7
6. INSTALLATION 8
   6.1 PACKAGING LIST AND PLACEMENT 8
   6.2 LOCATION SELECTION AND INSTALLATION 8
      6.2.1 STORAGE 8
      6.2.2 REQUIREMENTS FOR INSTALLATION 9
      6.2.3 GENERAL INSTALLATION 10
      6.2.4 BATTERY DIMENSIONS 11
      6.2.5 BATTERY STACKING INSTALLATION INSTRUCTIONS 11
      6.2.6 CONNECT THE POWER CABLE AND COMMUNICATION CABLE 14
      6.2.7 PARALLEL SYSTEM WIRING DIAGRAMS 14
   6.3 POWER ON SEQUENCE 15
   6.4 POWER OFF SEQUENCE 15
7. TROUBLESHOOTING, MAINTENANCE & DISPOSAL 17
   7.1 INTRODUCTION TO THE BMS 17
   7.2 TROUBLESHOOTING 18
   7.3 ALARM DESCRIPTION AND TROUBLESHOOTING 19
   7.4 BATTERY DISPOSAL 20
8. MidNite 10-YEARS LIMITED WARRANTY 20

Symbols on labels, manuals, and products

	Do not reverse the Positive and Negitive connection. N'inversez pas la connexion positive et négative.
	Do not place near open flame. Ne pas placer près d'une flamme nue.
	Keep out of reach of Children and pets. Ne placez pas l'appareil dans la zone de contact des enfants et des animaux domestiques.
	Warning electric shock. Avertissement de choc électrique.
	Fire Warning. Do not place near flammable material. Avertissement d'incendie. Ne placez pas à proximité de matériaux inflammables.
	Read the product and operation manual before operating the battery system! Lisez le produit et le manuel d'utilisation avant d'utiliser le système de batterie!
	Grounding. Système de mise à la terre.
	Recycle label.
	Label for Waste Electrical and Electronic Equipment (WEEE) Directive (2012/19/EU)

1. ABBREVIATIONS

- AWG – American Wire Gauge
- A – Amps
- Ah – Amp hour(s)
- AC – Alternating Current
- AFCI – Arc-Fault Circuit Interrupter
- AHJ – Authority Having Jurisdiction
- kAIC – kilo-Amp Interrupting Capability
- ANSI – American National Standards Institute
- BAT – Battery
- BMS – Battery Management System
- COM – Communication
- CT – Current Transformer
- DC – Direct Current
- DOD – Depth of Discharge
- EG – Equipment Ground
- EGS – Equipment Grounding System
- EMC – Electromagnetic Compatibility
- EPS – Emergency Power System
- ESS – Energy Storage System
- E-Stop – Emergency Stop
- FCC – Federal Communication Commission
- GE – Grounding Electrode
- GEC – Grounding Electrode Conductor
- GFCI – Ground Fault Circuit Interrupter
- GFDI – Ground Fault Detector/Interrupter
- Imp – Maximum Power Point Current
- IEEE – Institute of Electrical and Electronic Engineers
- IP – Ingress Protection
- Isc – Short-Circuit Current
- In-lbs. – Inch Pounds
- kW – Kilowatt
- kWh – Kilowatt-hour
- LFP – Lithium Iron Phosphate
- L1 – Line 1
- L2 – Line 2
- mm – Millimeters
- MPPT – Maximum Power Point Tracking
- mV – Millivolt
- N – Neutral
- NEC – National Electric Code

  NEMA National Electrical Manufacturers Association
- NFPA – National Fire Prevention Association
- Nm – Newton Meters
- NOCT – Normal Operating Cell Temperature
- PC – Personal Computer
- PCB – Printed Circuit Board
- PE – Protective Earth
- PPE – Personal Protective Equipment
- PV – Photovoltaic
- RSD – Rapid Shut Down
- SCC – Standards Council of Canada
- SOC – State of Charge
- STC – Standard Testing Conditions
- UL – Underwriters Laboratories
- UPS – Uninterrupted Power Supply
- V – Volts
- VOC – Open-Circuit Voltage
- VMP – Voltage Maximum Power

2. TECHNICAL SPECIFICATIONS TABLE

Product Name	**MNPowerflo 5**
Electrical Characteristics	
Nominal Voltage	51.2V
Nominal Capacity	100Ah
Energy	5,120Wh
Battery Chemistry	Lithium Iron Phosphate (LFP)
Cycle Life	6,000 cycles @77°F(25°C), 0.5C/0.5C
Operating Voltage	46.4~57.6V
Communication Interfaces	CAN/RS485/RS232
Scalable	Up to 20units
Charge&Discharge	
Nominal Discharging Current	75A
Nominal Charging Current	75A
Max. Discharging Current	100A
Environmental	
Environment	Indoor(Type 1)
Charging Temperature	32°F to 122°F (0°C to 50°C)
Operating Temperature	-4°F to 122°F (-20°C to 50°C)
Storage Temperature	14°F to 113°F (-10°C to 45°C)
Altitude	Maximum 9,843 ft (3,000 m)
Cooling Method	Natural Convection
IP Rating	IP20
Mechanical	
Dimension(L x W x D)	17.7×17.4×5.2in(450*444*133mm)
Weight	96.5lbs(43.8kG)
Installation	Rack mount

3. SAFETY

3.1 SAFETY INSTRUCTION

Before any work begins, carefully read all safety instructions, and always observe them when working on or with the battery. The installation must follow all applicable national or local standards and regulations. Consult with the local AHJ to obtain the proper permits and permissions before installation.

Incorrect installation may cause:

- *Injury or death to the installer, operator or third party*
- *Damage to the battery or other attached equipment*

3.2 IMPORTANT SAFETY NOTIFICATIONS

There are various safety concerns that must be carefully observed before, during, and after the installation, as well as during future operation and maintenance. The following are important safety notifications for the installer and any end users of this product under normal operating conditions.

DANGER! High Voltages and Large Current !
AVERTISSEMENT! Circuits à tension élevée!

1. **Do not disassemble the battery.** Contact the distributor for any issues that need repair for more information and proper handling instructions. Incorrect servicing or re-assembly may result in a risk of electric shock or fire and void the warranty.
2. **Never short-circuit DC inputs.** Short-circuiting the battery may result in a risk of electric shock or fire and can lead to severe injury or death and/or permanent damage to the unit and/or any connected equipment.
3. **Use caution when working with metal tools on or around batteries and systems. Risk** of electrical arcs and/or short circuiting of equipment can lead to severe injury or death and equipment damage.
4. **Beware of high battery current.** Please ensure that the battery module breakers and/or on/off switches are in the “open” or “off” position before installing or working on the battery. Use a voltmeter to confirm there is no voltage present to avoid electric shock.
5. **Do not make any connections or disconnections to the system while the batteries are operating.** Damage to system components or risk of electrical shock may occur if working with energized batteries.
6. Make sure the battery and rack are properly grounded.
7. An installer should ensure they are protected by reasonable and professional insulative equipment e.g., personal protective equipment (PPE).
8. Before installing, operating, or maintaining the system, it is important to inspect all existing wiring to ensure it meets the appropriate specifications and conditions for use.
9. Ensure that the battery and system component connections are secure and proper to prevent damage or injuries caused by improper installation.

WARNING **All work on this product must be carried out by qualified personnel. To reduce the risk of electric shock, do not perform any servicing other than that specified in the operating instructions unless qualified to do so.**

1. Read all instructions before commencing installation. For electrical work, follow all local and national wiring standards, regulations, and these installation instructions. All wiring should be in accordance with the National Electrical Code (NEC), ANSI/NFPA 70.
2. The battery and system can connect with the utility grid only if the utility provider permits. Consult with the local AHJ before installing this product for any additional regulations and requirements for the area.
3. All warning labels and nameplates on this battery should be clearly visible and must not be removed or covered.
4. The installer should consider the safety of future users when choosing the battery's correct position and location as specified in this manual.
5. Please keep children away from touching or misusing the battery and relevant systems.

The battery is designed to stop charging at 32°F. If charging current is observed when the internal battery temperature is below 32°F, disconnect battery immediately and consult manufacturer.

During the installation and use of this equipment, users must follow the safety guidelines below to ensure the stability and safety of the server rack batteries installation:

1.When installing MNPowerflo 5 batteries, it is recommended to install 6 layers of batteries in the same rack, with a maximum of 8 layers.

2.Ensure that the rack is securely installed on a level surface to prevent the batteries from tilting or collapsing due to uneven ground.

3.Follow the operating manual and installation instructions provided by the manufacturer during installation.

4.Regularly check the stability of the batteries and their supports to ensure that all connection components are tight.

5.Do not stack heavy objects on the batteries or perform any other operations that may affect their stability.

6.If any tilting or instability of the batteries is detected, stop using them immediately and conduct an inspection.

The company is not responsible for any damage or personal injury caused by failure to adhere to the above safety guidelines.

DISCLAIMER

MidNite reserves the right to modify the content herein at any time without prior notice. For the latest versions of our manuals and specification sheets, please visit www.midnitesolar.com.

4. BRIEF INTRODUCTION

The MNPowerflo 5 rack-mounted lithium batteries are ideal for low-voltage energy storage system applications. These batteries use lithium iron phosphate cells with the highest safety performance and a battery management system (BMS) that can monitor and collect voltage, current, and temperature of each cell within the module in real time. The BMS also contains a passive balance function and an advanced battery control method, both of which can help improve the performance of the battery pack.

5. SYSTEM OVERVIEW

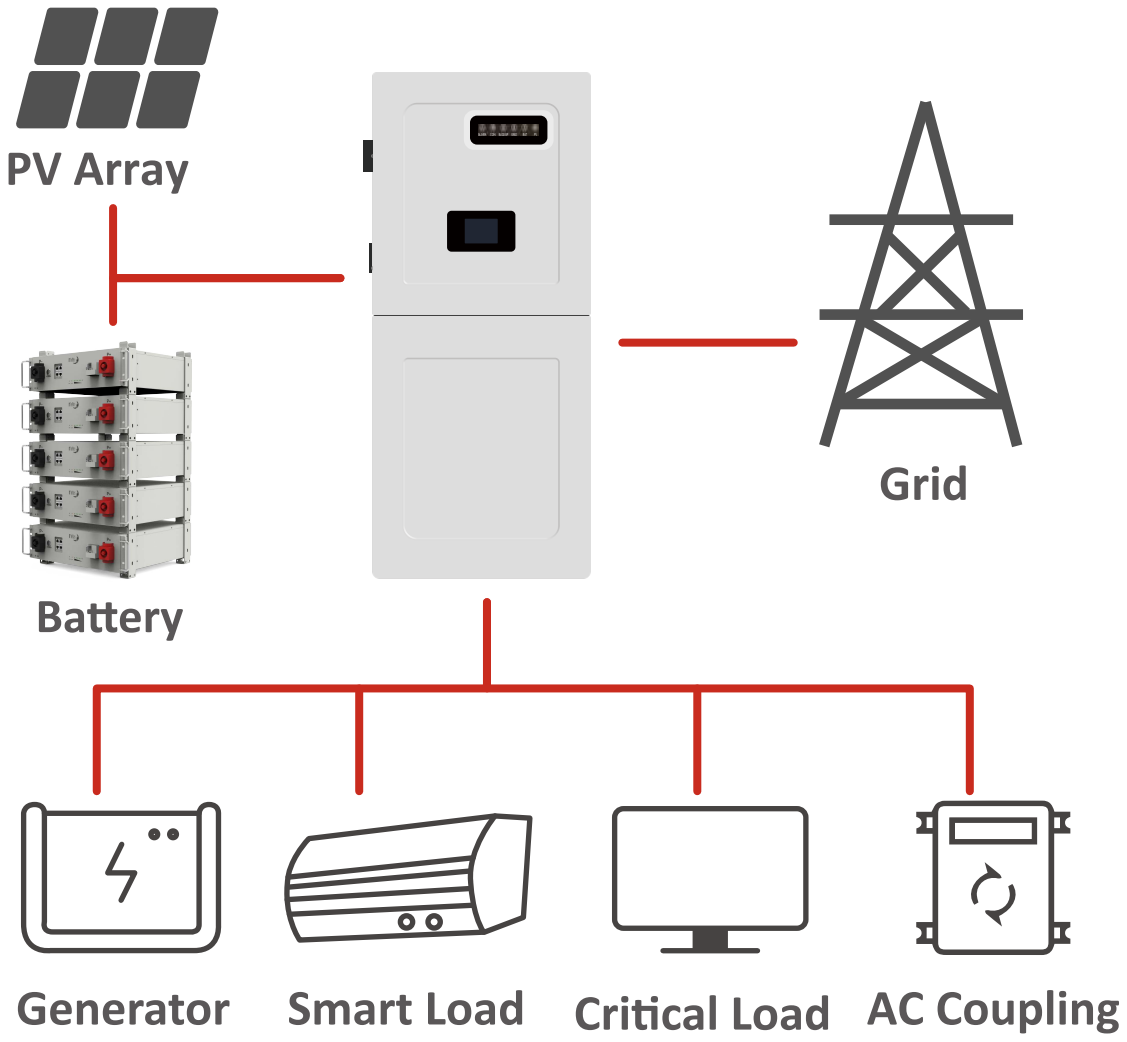

Overview of System Components

The battery module consists of sixteen "AAA" grade cells, a Battery Management System (BMS), a housing, a breaker, and wiring. It can be installed in a standard 19-inch cabinet and communicates with external devices via CAN/RS485, as well as with other MidNite batteries through RS485. The modules can be connected in parallel to accommodate expansion needs.

***This image is for display purposes only.**
Do not open the battery!
Doing so without proper authorization will void the warranty!

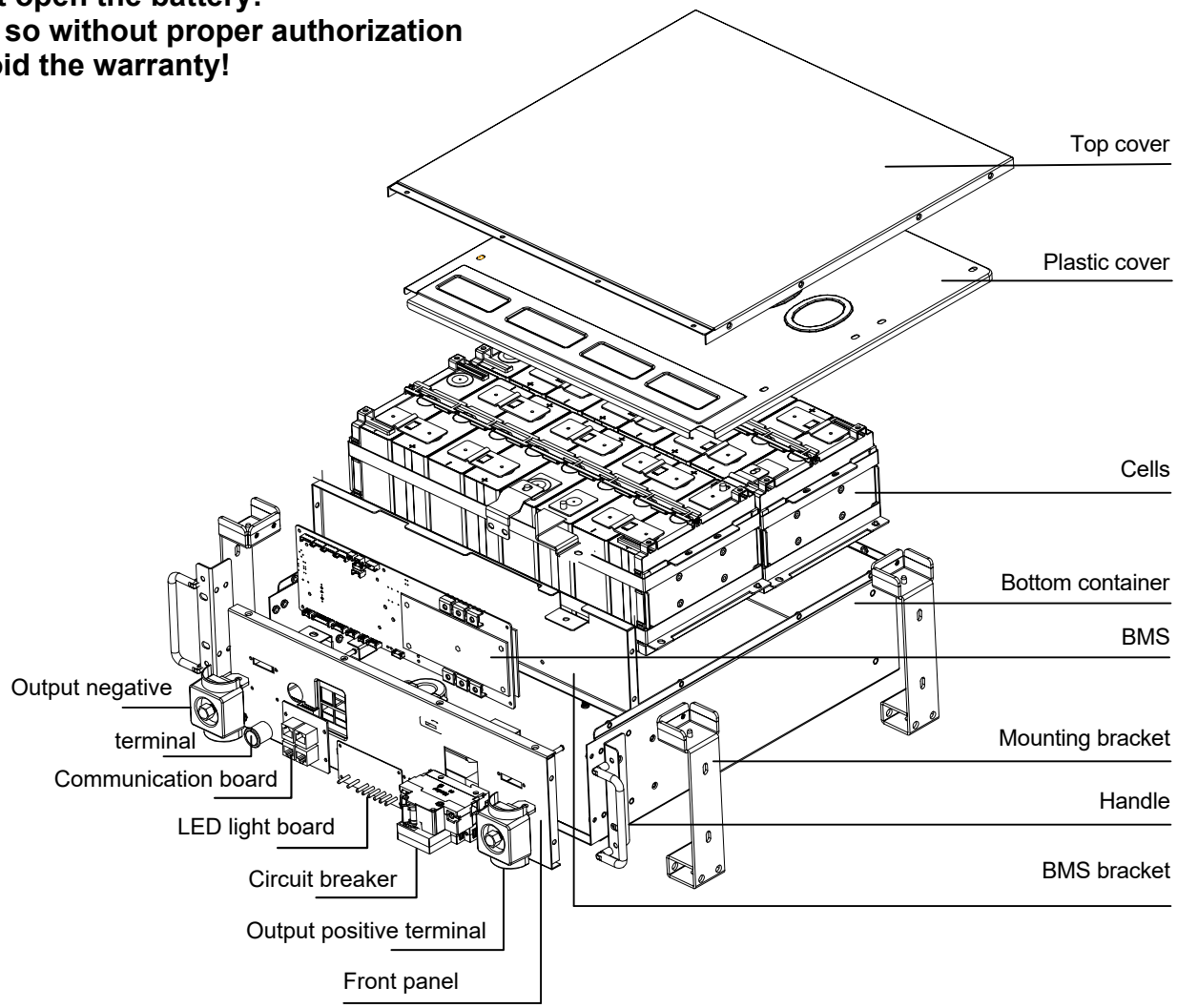

5.1. BATTERY DIAGRAM

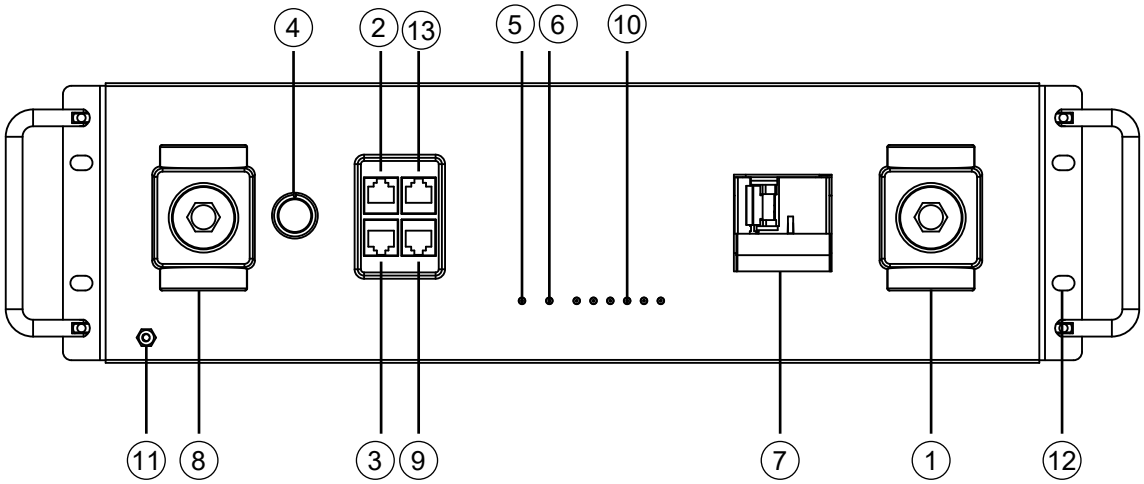

NO	ITEM	DESCRIPTION	REMARKS
1	Positive terminal	M8 bolt (x1)	Rated Screw Torque:141lbf·in(16N.m)
2	CAN/RS485 port	CAN/RS485 communication interface	Pin 1-RS485-B / Pin 2-RS485-A Pin 4-CANH / Pin 5-CANL / Pin 6-GND Pin 7-RS485-A / Pin 8-RS485-B
3	CONSOLE	RS232 communication interface	Pin 1-GND / Pin 2-RS232-TX Pin 3-RS232-RX / Pin 6-RS232-RX Pin 7- RS232-TX / Pin 8-GND
4	Power button	Turn on/off the BMS	–
5	RUN LED	Operational Status LED	Always on if system is running
6	ALM LED	Alarm Status LED	–
7	Circuit breaker	Shuts down power supply	–
8	Negative terminal	M8 bolt (x1)	Rated Screw Torque:141lbf·in(16N.m)
9	LINK-OUT	Parallel battery communication port	Pin 2-485A / Pin 3-485B Pin 4-UP OP+ / Pin 5-UP OP- Pin 6-485B / Pin 7-485A / Pin 8-GND
10	SOC LED	State of charge LED	6 green lights = full charge
11	Ground screw	Provides safe route for grounding	Rated Screw Torque:35lbf·in(3.9N.m)
12	Handle	For carrying/handling battery	–
13	LINK-IN	Parallel battery communication port	Pin 2-485A / Pin 3-485B Pin 4-UP IN+ / Pin 5-UP IN- Pin 6-485B / Pin 7-485A / Pin 8-GND

6. INSTALLATION

6.1 PACKAGING LIST AND PLACEMENT

When the product is unpacked, the contents should match those listed below:

MNPowerflo 5
1PC

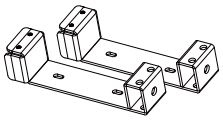

Side fixing brackets
4PCS

Communication network cable
2PCS

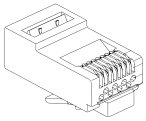

RJ45 connector
4PCS

Bracket fixing screw
M5*10mm / 8PCS
Rated Screw Torque:
52lbf·in(5.9N.m)

Bracket fixing screw
M5*50mm / 8PCS
Rated Screw Torque:
35lbf·in(3.9N.m)

Ground connection fixing screw
M4*10mm / 1PC
Rated Screw Torque:
35lbf·in(3.9N.m)

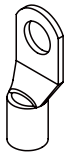

Crimp terminal
for #2 AWG cable
2PCS

6.2 LOCATION SELECTION AND INSTALLATION

6.2.1 STORAGE

There are a few steps to be taken to ensure that batteries are stored safely and in a state that will ensure they are not damaged during storage. These are detailed below.

Battery State

The state of the battery when placed into storage will affect how long it can be stored as well as the battery's condition when it is brought out of storage. MidNite recommends that each battery is brought to a 50% SOC (state of charge) before placing it in storage. Lithium batteries will lose a certain percentage of their total charge while in storage, depending on how long they are stored and the conditions they are stored in. MidNite recommends recharging the batteries after 8-9 months in prolonged storage.

Environmental Factors

The storage location for the MNPowerflo 5 battery can greatly affect the health of the battery.
For best results, the temperature should remain moderate, between 41°F and 68°F (5°C and 20°C).
Keep the battery away from locations where it may get wet or locations with high humidity (>55%).
Store the batteries away from combustible materials!

6.2.2 Requirements For Installation

WARNING **Do not put MNPowerflo 5 batteries in series!** The BMS and internal components are not designed to handle this setup, which could cause the modules to fail leading to damage.

- Avoid exposing batteries to conductive materials, such as water, strong oxidizers, and strong acids.
- Avoid putting batteries in direct sunlight or on extremely hot surfaces.
- Keep all flammable materials out of the working area.
- Use caution when handling batteries and/or battery-powered devices to avoid damaging the battery casing or connections.
- Before using batteries, inspect them for signs of damage.
- Different models of battery packs do not support parallel operation.

IMPORTANT: **Never position the battery upside down or face down!**

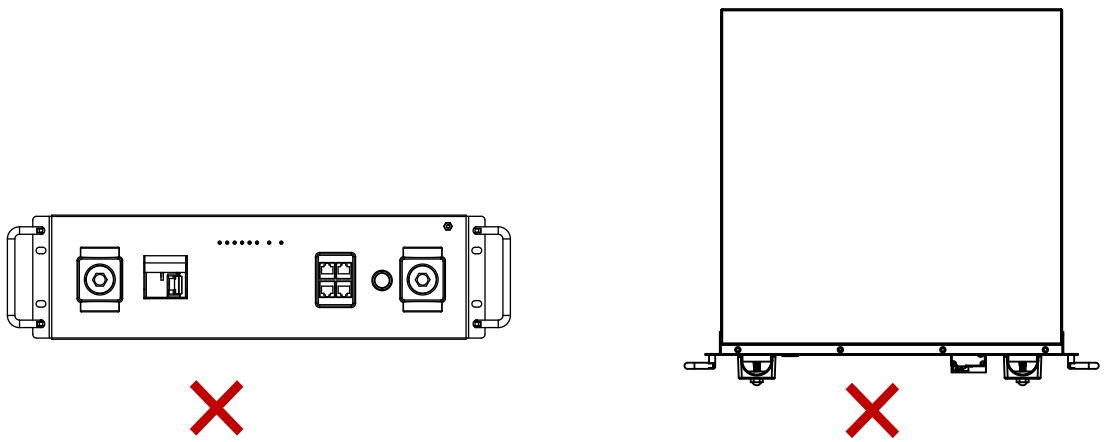

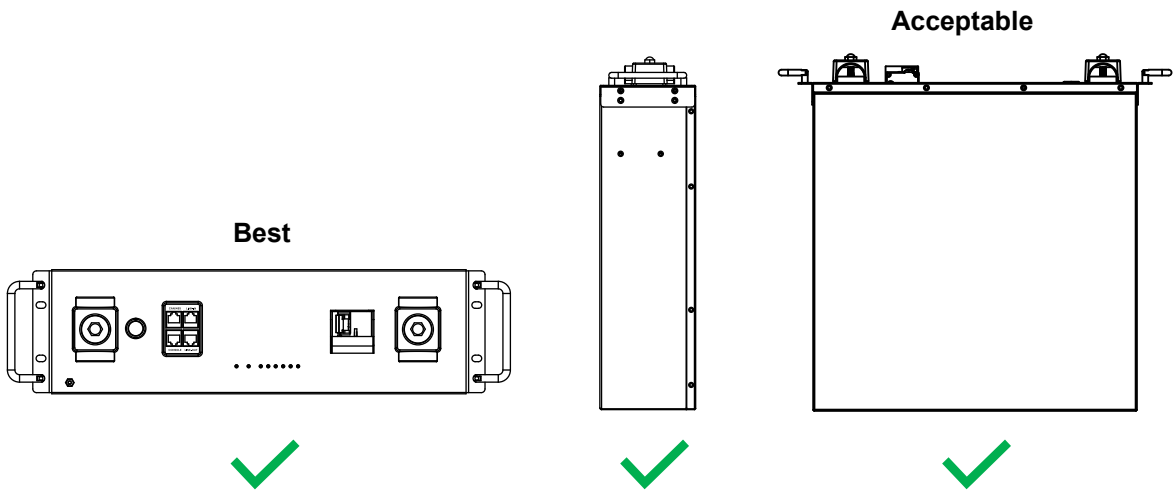

6.2.3 General Installation

CABLE SIZE	MIN. INSULATOR VOLTAGE	TORQUE VALUE	MAX RECOMMENDED DISTANCE
Min #2 AWG	600V	Rated Screw Torque: 141lbf·in(16N.m)	15 ft. (4.6 m)

NOTE:**This chart applies for a 100A continuous output (one battery).** Where ambient temperature is above 86°F (30°C), cable size must be increased according to NEC 310.

DANGER:*When adding or removing a battery from any rack, cabinet, or busbar, turn off ALL batteries, and use a voltmeter to confirm there is no voltage present. This will prevent users from encountering live (powered) busbars by accident*. ***Failure to do so can result in severe injury and/or death.***

Tools Needed for Installation

The tools required may vary depending on the mounting location. Typically, the following items are needed to install the battery into an MNPowerflo 5 battery rack solution or general racking

1. 10mm socket and ratchet
2. Phillips head screwdriver
3. Torque wrench
4. M8 terminal nuts *(included in package)*

Connecting Cables to the Battery Terminals and Busbars

MidNite recommends using a properly sized (amp rated) busbar to parallel batteries together. Paralleling via the battery terminals will cause inconsistent charging and discharging issues in the bank.

1. Identify the positive and negative terminals of the battery. These are labeled and color coded (red for positive, black for negative).
2. Verify all hardware is on hand to attach the cable properly. Check to ensure the bolt threads fully into the terminal and can be tightened to the proper torque following the table above.
3. Connect the cables to the battery terminals by removing the M8 terminal nuts, inserting them through the eyelet of the proper cable, and reseating the bolt into the terminal block to the correct torque.
4. Connect the positive battery cables to the positive busbar by removing the bus nuts, inserting them through the eyelets of the proper cable, and reseating the bolt into the busbar to the proper torque value. Repeat with all negative cables.
5. **DO NOT** finger tighten the battery terminal nuts. They require 60 in-lbs torque to ensure they do not loosen during operation. Failure to properly tighten the terminal nuts can result in serious damage and will void the product warranty.

6.2.4 Battery dimensions.

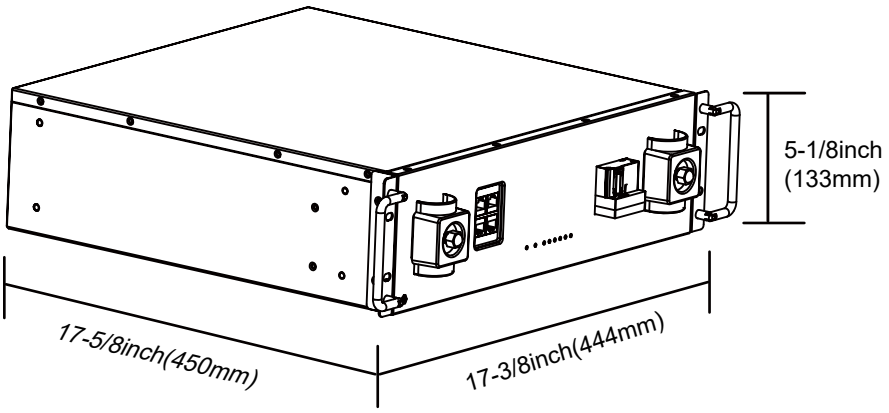

6.2.5 Battery stacking installation instructions.

Step 1:Open the packaging and take out the battery.

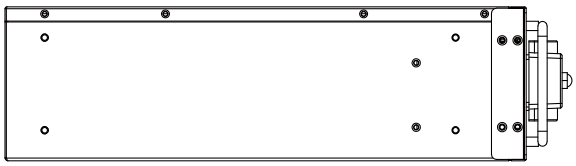

Step 2:Install Stacking brackets at the four corners of the battery.

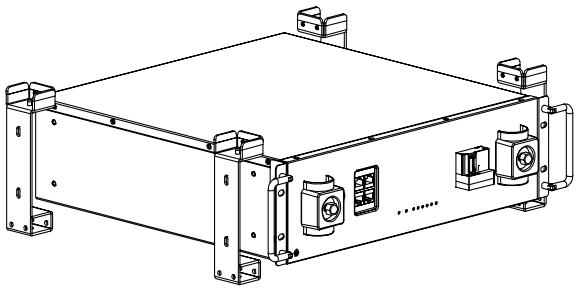

(2.1)

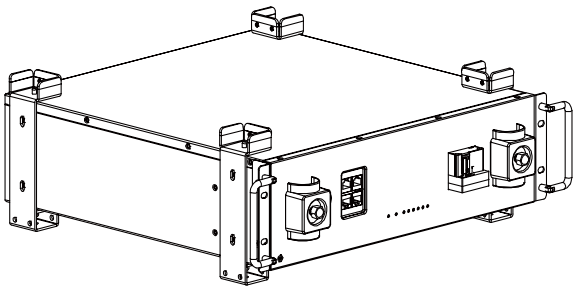

(2.2)

Step 3:Ensure that the screws of the four stacking brackets are tightened(M5*10mm).

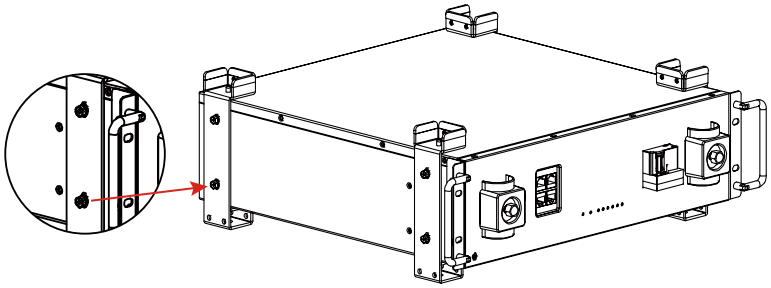

Step 4:Place the next battery module on top of the previous battery module, and ensure that the fastening screws are tightened(M5*50).

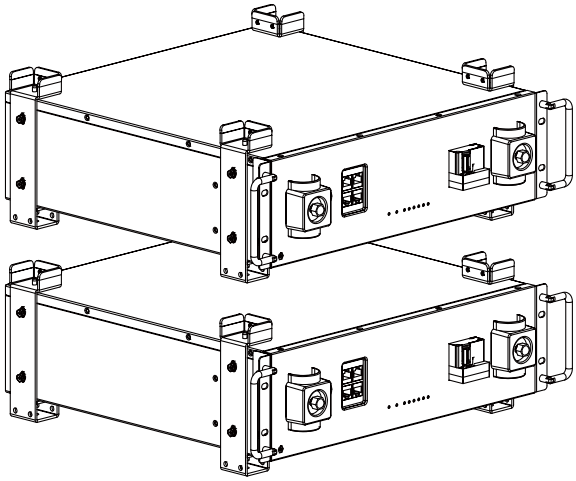

(4.1)

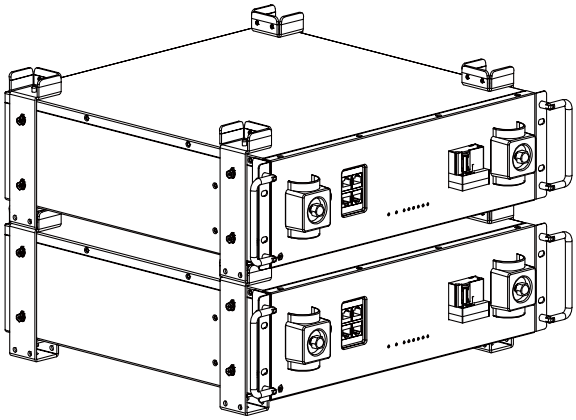

(4.2)

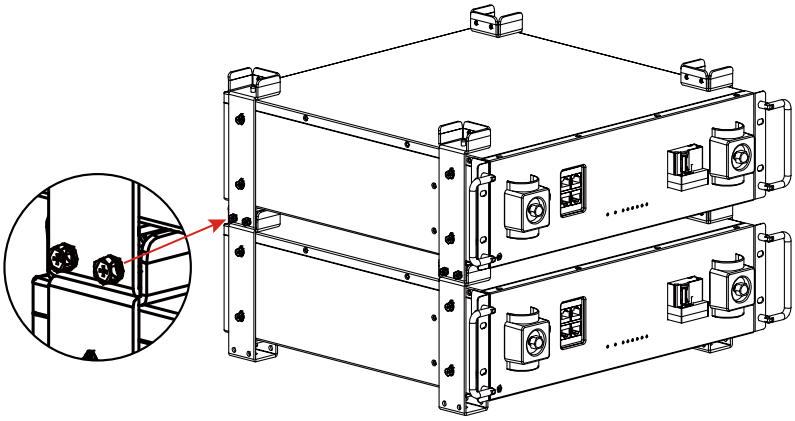

(4.3)

Step 5:Repeat these steps for the remaining battery modules until all are installed.
In a single rack, it is recommended to install 6 layers of batteries, with a maximum of 8 layers. The maximum number of batteries that can be connected in parallel is 20 units.

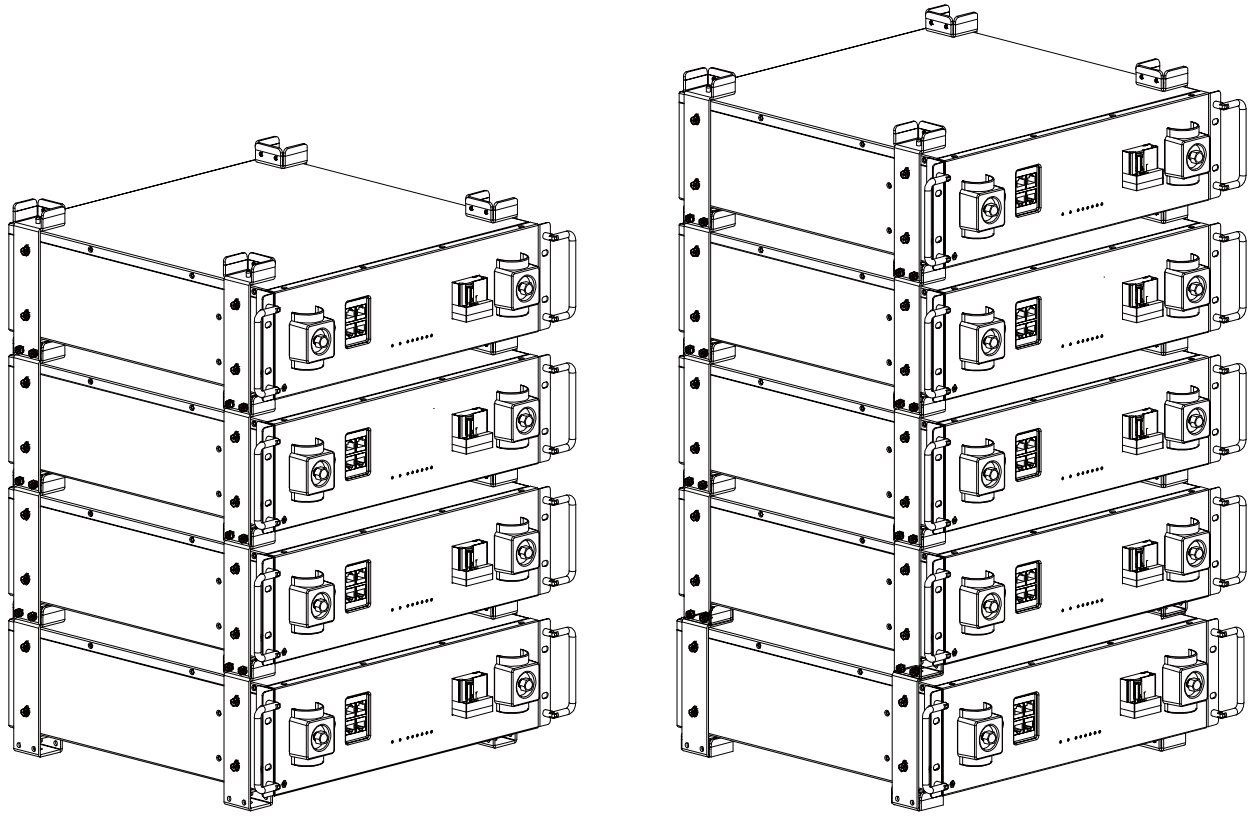

6.2.6 Connect the power cable and communication cable, note that the power cable needs to be securely fixed.

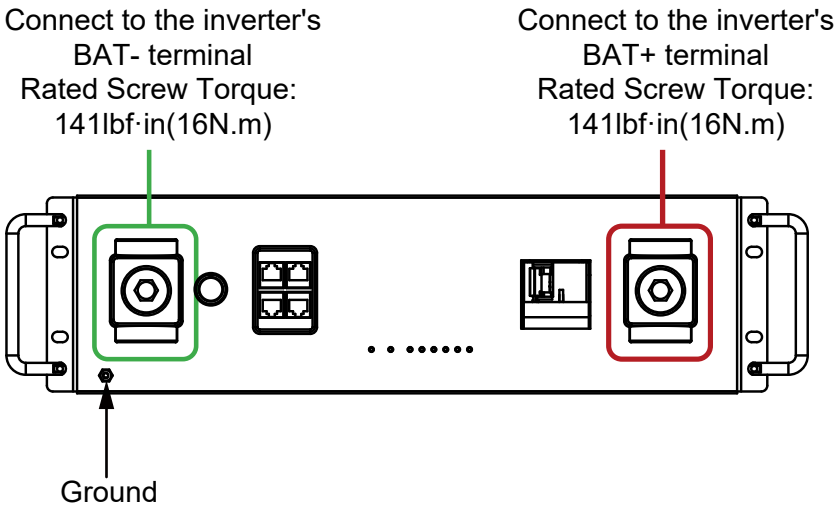

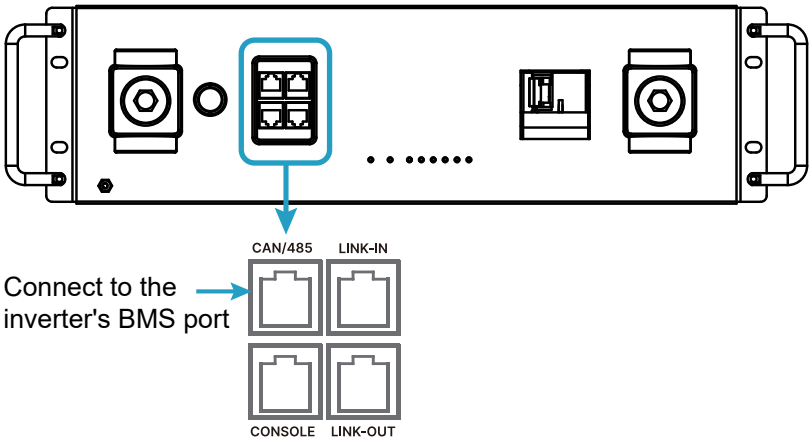

6.2.7 Parallel System Wiring Diagrams

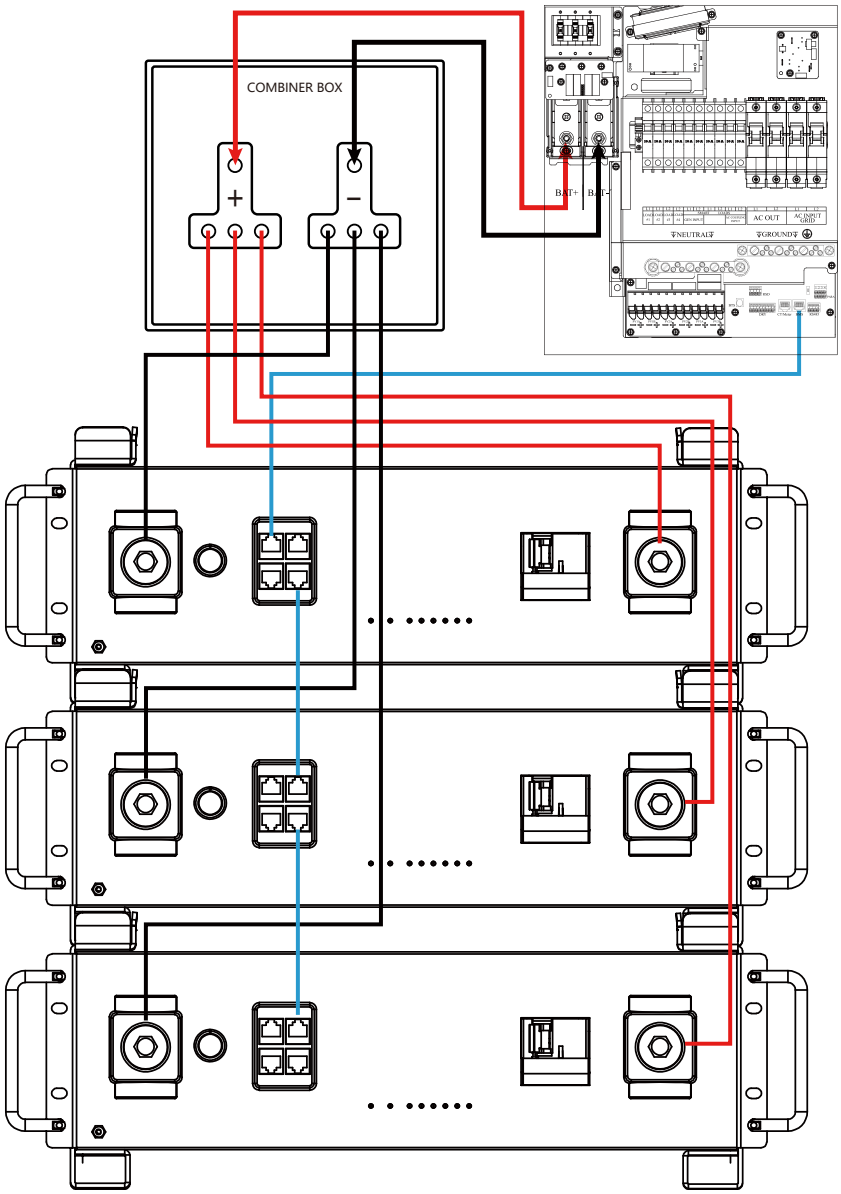

6.3 STARTUP PROCEDURE

Battery Side:

1. Ensure the battery is properly connected to the inverter with both power cables and communication cables securely in place.
2. Switch on the circuit breaker on the battery side.
3. Press and hold the battery's "POWER" button for 3 seconds, and confirm that the RUN indicator is flashing and the SOC indicator is lit normally.

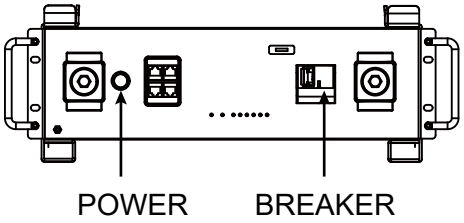

Inverter Side:

4. Switch on the circuit breaker at the inverter's battery input.
5. Start the inverter by pressing and holding the power button on the inverter for 3 seconds.
6. Switch on the circuit breaker on the inverter’s load side.

Startup Status Display Instructions

1. Single Battery Pack Startup: Press and hold the "POWER" button for 3 seconds. The SOC, RUN, and ALM indicators will all light up and flash 3 times. After that, the SOC indicator will remain on, and the RUN indicator will flash, indicating that the startup is complete.
2. Parallel Battery Pack Startup: First, check if the communication connection cables are properly installed. Then, press and hold the "POWER" button on the master unit for 3 seconds. The SOC, RUN, and ALM indicators on both the master and slave units will all light up and flash 3 times. Afterward, the master unit’s SOC indicator will remain on, and the RUN indicator will flash. The slave unit will only have the RUN indicator flashing, indicating that the master-slave battery pack startup is complete.

6.4 SHUTDOWN PROCEDURE

Inverter Side:

1. Turn off the circuit breaker on the inverter’s load side.
2. Shut down the inverter by pressing and holding the power button on the inverter for 3 seconds.
3. Turn off the circuit breaker at the inverter’s battery input.

Battery Side:

4. Turn off the circuit breaker on the battery side.
5. Press and hold the battery's "POWER" button for 3 seconds to shut down the battery, and ensure that the SOC, RUN, and ALM indicators are all turned off.

Shutdown Status Display Instructions

1. Single Battery Pack Shutdown: Press and hold the "POWER" button for 3 seconds. The SOC, RUN, and ALM indicators will light up one by one, then all will turn off, indicating that the shutdown is complete.
2. Parallel Battery Pack Shutdown: Press and hold the "POWER" button on the master unit for 3 seconds. The SOC, RUN, and ALM indicators on the master unit will light up one by one, then all will turn off. The RUN indicator on the slave unit will turn off, indicating that the master-slave battery pack shutdown is complete.

Notes

● Maintain Safety: When operating electrical equipment, Use appropriate safety measures, such as wearing insulated gloves and ensuring hands are dry.

● Regular Maintenance: Check and maintain the energy storage system to ensure its long-term stable operation.

If you have any questions or encounter problems, it is recommended to contact the equipment supplier or professional technical support.

IMPORTANT:(SOC Discrepancy)

It is normal for lithium batteries with internal BMS that are wired in parallel to demonstrate a variety of SOC readings during charge or discharge cycles. **Variations of up to 10% are common.** This is not cause for concern or indication that the module is providing less than the maximum capacity. This can be caused by a few different factors, including variations in wire resistance, internal battery resistance, temperature differences and cell variations. Even a slight variation causes one battery to take more of the load or charge for a short time. Over the duration of the discharge or charge cycle, this will balance out with the lagging battery taking the load or charge at the other end of the cycle resulting in recovering the full listed kWh capacity of the pack. The voltage differences created as batteries diverge in SOC will eventually cause them to converge at some point in the cycle.

7. TROUBLESHOOTING, MAINTENANCE & DISPOSAL

7.1 INTRODUCTION TO THE BMS

The BMS is intended to safeguard the battery and battery cells against a variety of situations that could damage or destroy system components. This protection also aids in keeping the battery and battery cells operational for a greater number of life cycles. Each MNPowerflo 5 battery is specifically configured to ensure peak performance and operation with any inverter system.

PCB temperature protection

The BMS will ensure that the Printed Circuit Board (PCB) does not overheat. This is the part that houses most of the “brains” of the battery. This feature will turn off the battery if it begins to overheat.

Cell balance protection

Cell balance ensures that each cell is within a specific voltage range of each other. Cell balance is crucial for ensuring that the battery is operating properly for its lifespan. This is always done automatically.

Environmental temperature protection

It may be dangerous to attempt using the battery in extreme heat or cold. Continued operation in these conditions may result in permanent damage to the battery module and its components. To prevent this, the BMS is designed to measure the temperature while charging/discharging and will shut down the battery to prevent damage.

Voltage protection

The BMS is designed to continuously monitor the voltage of each individual cell and ensure that they are not over/undercharged.

Current protection

The BMS is designed to constantly monitor the charge/discharge amperage and has built-in safeguards against exceeding specific parameters. These include built-in timers that shut off quickly in the event of short circuits, extremely high amperage and delayed shut down for amperage that is only slightly above the maximum capacity.

7.2 TROUBLESHOOTING

Alarm Description and Troubleshooting.

When the Alarm light on the battery control panel is on, it means that the battery has given an alarm or has been protected from potential damage.

FRONT PANEL INDICATOR LIGHTS

RUN/ALM LIGHTS

The MNPowerflo 5 battery features 2 LED status indicator lights on the front panel of the unit. Their functions are listed below:

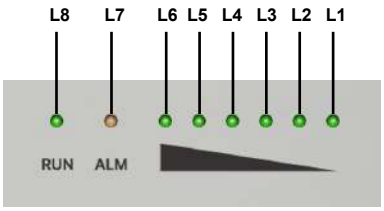

ALM -The Alarm light indicates a static, red color and powers on when a fault occurs. Please refer to the table below for more information on specific faults and required actions.

RUN-The Run light will indicate a solid, green color when the battery is in an idle state. When the battery is either charging or discharging, the light will indicate a blinking, green color.

Light Description	Indication	Color	Indication Description
ALM	Static	Red	A fault has occurred
RUN	Static	Green	Battery is in the idle state
	Blinking	Green	Battery is discharging
	Light	Green	charging

SOC INDICATOR LIGHTS

The battery also features an LED capacity gauge to indicate the SOC (state of charge). The table below provides the detailed logic of the LED lights.

Status		LED status							
Battery Level Indicator		L8	L7	L6	L5	L4	L3	L2	L1
Battery SOC Levels (%)	0～17%	Light	OFF	OFF	OFF	OFF	OFF	OFF	Blinking(Charging) /Light(Other)
	18～33%			OFF	OFF	OFF	OFF	Blinking(Charging) /Light(Other)	Light
	34～50%			OFF	OFF	OFF	Blinking(Charging) /Light(Other)	Light	Light
	51～66%			OFF	OFF	Blinking(Charging) /Light(Other)	Light	Light	Light
	67～83%			OFF	Blinking(Charging) /Light(Other)	Light	Light	Light	Light
	84～100%			Blinking(Charging) /Light(Other)	Light	Light	Light	Light	Light
	Full Charged			Light	Light	Light	Light	Light	Light

Note: In a system with multiple batteries connected in parallel, only the power gauge of the master battery will be activated. The master battery's power gauge represents the SOC of the entire battery system, and the gauges of the other batteries will not be activated.

If the battery is not stacked properly, the battery display will be activated. Please check your cable connections and placement again.

7.3 ALARM DESCRIPTION AND TROUBLESHOOTING

When the ALM light on the battery control panel is on, it means that the battery has given an alarm or has been protected from potential damage.

Common Faults and Solutions

FAULT	ANALYSIS
Overvoltage Protection	RUN light is constantly on.
Undervoltage Protection	5-minute delay before entering sleep mode.
Overtemperature Protection	ALM light is constantly on.
Low-Temperature Protection	ALM light is constantly on.
MOS Overtemperature Protection	ALM light is constantly on.
Ambient High Temperature	ALM light is constantly on.
Ambient Low Temperature	ALM light is constantly on.
Short Circuit Protection	ALM light is constantly on.
Charging	RUN light is constantly on, SOC light is flashing.
Discharging	RUN light is flashing, SOC light is constantly on.
Standby	RUN light is flashing, SOC light is constantly on.

NOTE:*If any of the warnings or faults from both tables persist, please contact the distributor for additional troubleshooting steps.*

7.4 BATTERY DISPOSAL

The MNPowerflo 5 battery is designed to last for more than 15 years when used correctly. We have worked tirelessly to ensure that our batteries will maintain a charge after thousands of cycles. However, when it does come time to retire the battery, there are a few things to consider. Lithium iron phosphate batteries are considered a hazardous material and should not be disposed of by simply placing them in the trash. There are several websites and organizations that will accept this battery to recycle at little to no cost to the user. At MidNite, we understand that we are working with customers across the United States and the world. Our recommendation is to go online and search the term “Lithium battery Disposal Near Me.” There will likely be an assortment of organizations that can safely dispose of LFP batteries.

We recommend calling ahead of time to ensure that the location is still open and accepting material.

If users are unable to locate a disposal location safely, MidNite is here to help. Before dumping the battery or disposing of it incorrectly, please contact our customer service team for assistance.

8. MidNite 10-YEARS LIMITED WARRANTY

MidNite Solar Inc offers a 10-year Full Parts Replacement or Full Product Replacement Prorated Warranty from the date of battery purchase. The warranty must be registered within the first year of purchase or provide proof of purchase from an MidNite authorized distributor to remain valid. If choosing not to register or cannot provide proof of purchase, the warranty may be invalidated. This limited warranty is to the original purchaser of the product and is one time transferable only if the product remains installed in the original installation location. All parts exchanges, including BMS, are covered during the warranty period. If a full replacement warranty is needed, the warranty is prorated 1/9th per year after the first year at the current retail pricing. Replacement shipping charges may incur on a case-by-case basis. Outside of the continental US, replacement shipping charges may apply. Product that is not purchased through an MidNite approved vendor is not covered under this warranty. A list of approved vendors can be found on the MidNite website. Reselling or removing the product from the original installation site will void the warranty.

Warranty Exclusions-MidNite Solar has no obligation under this limited warranty for products subjected to the following conditions including (but not limited to):

- Damages incurred during installation/reinstallation or removal
- Poor workmanship performed by an individual, installer, or a firm
- Damages caused by mishandling the product or inappropriate environmental exposure
- Damages caused by improper maintenance or operating outside the specified operating conditions
- Tampering, altering, and/or disassembly of the product
- Using product in applications other than what the manufacturer intended
- Lightning, fire, flood, earthquake, terrorism, riots, or acts of God
- Any product with a serial number that has been altered, defaced, or removed
- Any unauthorized firmware updates/upgrades/patches
- Damages incurred from voltage or current spikes due to open-loop lithium battery communications

MidNite product warranty is a limited warranty MidNite limits its liability in the event of a product defect to repair or replacement in accordance with the terms of this limited warranty. MidNite is not responsible for any additional or indirect damages that may arise from the malfunctioning of the product. These damages could be incidental or consequential, including without limitation, any liability for the loss of revenue, profits, or time. MidNite shall not be liable for any direct or indirect loss of life, including (but not limited to) bodily injury, illness, or death arising from the misuse or mishandling of the product, whether caused by negligence or otherwise.

Contact the distributor for Return Policy and Warranty Claims.

NOTES

CONTACT US

support@midnitesolar.com
www.midnitesolar.com